MICHELIN TECHNICAL DATA



MATERIAL HANDLING

INDUSTRIAL PNEUMATIC TIRES
RADIAL TECHNOLOGY

MICHELIN





MICHELIN TECHNICAL DATA

INDUSTRIAL PNEUMATIC TIRES
RADIAL TECHNOLOGY



TABLE OF CONTENTS

TIRE RANGE PAGE 4

INTRODUCTION PAGE 5

PRODUCT PRESENTATION AND CHARACTERISTICS

- MICHELIN XZR PAGE 6
- MICHELIN XZM PAGE 10
- MICHELIN XZM 2+ PAGE 26
- MICHELIN X STACKER 2 PAGE 28
- MICHELIN X STACKER 3 HD PAGE 30
- MICHELIN X STRADDLE 2 PAGE 32
- MICHELIN X TERMINAL T PAGE 34
- MICHELIN X AGV^{EV} PAGE 36

INDUSTRIAL TIRES PAGE 39

GENERAL INFORMATION PAGE 40



TIRE RANGE



MICHELIN XZR



MICHELIN XZM

MICHELIN XZM 2+



MICHELIN X STACKER 2



MICHELIN X STACKER 3 HD

MICHELIN X STRADDLE 2



MICHELIN X TERMINAL T



MICHELIN X AGV EV

INTRODUCTION

The content provided in this document is intented for informal purposes only. It may not be used or relied upon for legal or statutory actions.

For technical and safety reasons, a tire should never be used beyond the limits of the technical specifications for which it has been approved. All recommendations provided in this document should be followed. Michelin is not responsible for any usage, fitting, storage, maintenance or handling actions outside of the stated recommendations.

MICHELIN® tires are designed for a specific use as defined in this catalog. Any other usage constitutes an abnormal use. However, in some circumstances, Michelin may issue a waiver which will specify the conditions and the permitted operational limits for a specific application. If a tire is to be used differently than what it is designed for, please consult your nearest Michelin Representative for further guidance. Michelin expressly denies any responsibility for any abnormal use of its tires or any use different from the tire's intended design in the absence of express written permission (derogation) from an authorized Michelin Representative.

Further, correct usage and maintenance are necessary to achieve proper performance and to maximize life. Therefore, it is recommended that users adhere to all safety and usage recommendations. However, you must note that these recommendations may be subject to more restrictive local legal and/or regulatory requirements.

Specifically, tire load and pressure tables included in this book are classified according to the various applications of machines. In the load and pressure tables, the shaded boxes indicate the normalized values. These values reflect optimal use, the best balance of performances. Again, these values are given for informational purposes only and may not be used for legal or statutory actions.

Finally, unless otherwise specified, MICHELIN® off-the-road, industrial, and compact tires comply with internationally accepted standards that are established by TRA (Tire and Rim Association), ETRTO (European Tire and Rim Technical Organisation), JATMA (Japan Automobile Tire Manufacturers Association), and/or ISO (International Standards Organisation). Among other things, the standards encompass load capacity, inflation pressure, overall diameter, overall width, and related valves and rims. Some minor differences may exist between these standards.

Following publication, the information herein is subject to change in Michelin's sole discretion.

MICHELIN XZR



1 SPEED

Capable of reaching up to 50 km/h [1]
The radial technology, tread pattern and specific rubber compounds allows for higher speeds.

2 SAFETY

Exceptional grip for short distance braking
The radial structure and multi-block pattern provides maximal ground footprint.

3 ROBUSTNESS

Limit machine downtime
Radial tubeless construction to prevent punctures and damages.

TIRE CHARACTERISTICS



ADDITIONAL INFORMATION

VEHICLE EQUIPMENT





The XZR tire is the solution for baggage tractors, urban machines and other high intensity forklift applications. Customers can expect an exceptional total value of ownership.

- Michelin Port Tires Product Manager

[1] Characteristic of the product measured with the TKPH indicator.

LEARN MORE

ON THE WEB
business.michelin.co.uk

TESTIMONIALS
youtube.com/michelinearthmover

TOOLS

BEYOND ROAD SELECTOR
beyond-road.selector.michelingroup.com/mh

CONTACT

Please contact your local sales representative for more information.

MICHELIN XZR



TECHNICAL CHARACTERISTICS

DESCRIPTION	CAI [MSPN]	Max.dist./ hour km [mile]	Section width mm [in]	Outer diameter mm [in]	Static load radius mm [in]	Rolling circumference mm [in]	Tread depth mm [32rd]	Dual spacing mm [in]	Cap liter [gal]	Measuring recommended rim	Other approved rims mm [in] See end of document for more options
6.00 R9 121A5 TL	110206 68425	25 15.5	164 6.5	530 20.9	241 9.5	1605 63.2	10 12.6	192 7.6	18 4.8	4.00E	-

LOAD CAPACITY BASED ON INFLATION PRESSURE AND SPEED

Bar *Psi*		6 *87*	8 *116*	10 *145*
Machine - use kg - *lbs*		COUNTERBALANCED LIFT TRUCK - STEER WHEEL		
STATIC		1590 *3506*	1890 *4167*	2190 *4829*
10 km/h	*6 mph*	1370 *3021*	1630 *3594*	1890 *4167*
25 km/h	*15 mph*	1050 *2315*	1250 *2756*	1450 *3197*
35 km/h	*22 mph*	980 *2161*	1160 *2558*	1350 *2977*
40 km/h	*25 mph*	940 *2073*	1120 *2470*	1300 *2867*
50 km/h	*31 mph*	890 *1962*	1050 *2315*	1220 *2690*
Machine - use kg - *lbs*		COUNTERBALANCED LIFT TRUCK - LOAD WHEEL		
10 km/h	*6 mph*	1370 *3021*	1630 *3594*	1890 *4167*
25 km/h	*15 mph*	1370 *3021*	1630 *3594*	1890 *4167*
35 km/h	*22 mph*	1320 *2911*	1570 *3462*	1820 *4013*

MOUNTING ACCESSORIES AVAILABLE	Recommended rim	Tubeless bead seal [CAI]	Rubber ring [CAI]	Tube [CAI]	Flap [CAI]
	4.00E	100TL9 [102151]	N/A	9F [368957]	125 - 9 [242079]

6.50 R10 128A5 TL	110207 79365	25 15.5	184 7.2	578 22.8	264 10.4	1753 69	11 13.9	217 8.5	23 6.1	5.00F	5.50F

LOAD CAPACITY BASED ON INFLATION PRESSURE AND SPEED

Bar *Psi*		6 *87*	8 *116*	10 *145*
Machine - use kg - *lbs*		COUNTERBALANCED LIFT TRUCK - STEER WHEEL		
STATIC		1930 *4256*	2310 *5094*	2720 *5998*
10 km/h	*6 mph*	1660 *3660*	1990 *4388*	2340 *5160*
25 km/h	*15 mph*	1280 *2822*	1530 *3374*	1800 *3969*
35 km/h	*22 mph*	1180 *2602*	1420 *3131*	1670 *3682*
40 km/h	*25 mph*	1140 *2514*	1360 *2999*	1610 *3550*
50 km/h	*31 mph*	1080 *2381*	1290 *2844*	1520 *3352*
Machine - use kg - *lbs*		COUNTERBALANCED LIFT TRUCK - LOAD WHEEL		
10 km/h	*6 mph*	1660 *3660*	1990 *4388*	2340 *5160*
25 km/h	*15 mph*	1660 *3660*	1990 *4388*	2340 *5160*
35 km/h	*22 mph*	1600 *3528*	1910 *4212*	2250 *4961*

MOUNTING ACCESSORIES AVAILABLE	Recommended rim	Tubeless bead seal [CAI]	Rubber ring [CAI]	Tube [CAI]	Flap [CAI]
	5.00E	125TL10 [102183]	N/A	10F [007946]	140 - 10 [001969]

MICHELIN XZR



TECHNICAL CHARACTERISTICS

DESCRIPTION	CAI *[MSPN]*	Max.dist./ hour km *[mile]*	Section width mm *[in]*	Outer diameter mm *[in]*	Static load radius mm *[in]*	Rolling circumference mm *[in]*	Tread depth mm *[32rd]*	Dual spacing mm *[in]*	Cap liter *[gal]*	Measuring recommended rim	Other approved rims mm *[in]* *See end of document for more options*
7.00 R12 136A5 TL	110210 *62234*	25 *15.5*	193 *7.6*	661 *26*	302 *11.9*	2006 *79*	11 *13.9*	230 *9.1*	32 *8.5*	5.00S	-

LOAD CAPACITY BASED ON INFLATION PRESSURE AND SPEED

Bar *Psi*		6 *87*	8 *116*	10 *145*
Machine - use kg - *lbs*		COUNTERBALANCED LIFT TRUCK - STEER WHEEL		
STATIC		2320 *5116*	2750 *6064*	3390 *7475*
10 km/h	*6 mph*	1990 *4388*	2370 *5226*	2920 *6439*
25 km/h	*15 mph*	1530 *3374*	1820 *4013*	2240 *4939*
35 km/h	*22 mph*	1420 *3131*	1690 *3726*	2080 *4586*
40 km/h	*25 mph*	1370 *3021*	1620 *3572*	2000 *4410*
50 km/h	*31 mph*	1290 *2844*	1530 *3374*	1890 *4167*
Machine - use kg - *lbs*		COUNTERBALANCED LIFT TRUCK - LOAD WHEEL		
10 km/h	*6 mph*	1990 *4388*	2370 *5226*	2920 *6439*
25 km/h	*15 mph*	1990 *4388*	2370 *5226*	2920 *6439*
35 km/h	*22 mph*	1920 *4234*	2280 *5027*	2800 *6174*

MOUNTING ACCESSORIES AVAILABLE	Recommended rim	Tubeless bead seal [CAI]	Rubber ring [CAI]	Tube [CAI]	Flap [CAI]
	5.00S	125TL12 [522788]	N/A	12H [625614]	135 - 12 [190171]

NOTES

MICHELIN XZM



1 TREADLIFE

Increase wear life: from +50% to +160% hours in operation [1]
Outstanding life performance is expected with the improved radial structure in addition to the deep and massive tread pattern.

2 ROBUSTNESS

Optimize machine uptime
The high resistant metallic crown belt structure and innovative tread pattern provide additional sidewall protection.

3 PRODUCTIVITY

Drive up to 15 km in an hour at 25 km/h [2]
Radial technology is usually the best alternative for operations requiring more productivity with the transport of more tons per hour.

TIRE CHARACTERISTICS



ADDITIONAL INFORMATION

VEHICLE EQUIPMENT






AND MORE

> The XZM is the most durable tire in its class, with approximately 40% more life than its competitors. Its robust steel radial structure is recognized worldwide. Some of our customers are thrilled with its downtime and service value.
>
> *- Michelin Port Tires Product Manager*

[1] Field study in real life conditions made by Michelin for 2 years 2009-2011, on 60 forklifts in Europe (UK/Germany) same tire size and same usage on existing MICHELIN XZM range vs. premium competitors.
[2] Characteristic of the product measured with the TKPH indicator. Distance per hour is directly correlated to the amount of tons transportable in an hour.

LEARN MORE

ON THE WEB
business.michelin.co.uk

TESTIMONIALS
youtube.com/michelinearthmover

TOOLS

BEYOND ROAD SELECTOR
beyond-road.selector.michelingroup.com/mh

CONTACT

Please contact your local sales representative for more information.

MICHELIN XZM



TECHNICAL CHARACTERISTICS

DESCRIPTION	CAI [MSPN]	Max.dist./ hour km [mile]	Section width mm [in]	Outer diameter mm [in]	Static load radius mm [in]	Rolling circumference mm [in]	Tread depth mm [32rd]	Dual spacing mm [in]	Cap liter [gal]	Measuring recommended rim	Other approved rims mm [in] See end of document for more options
5.00 R8 111A5 TL	110208 86381	15 9.3	137 5.4	463 18.2	212 8.3	1407 55.4	23 29	164 6.5	9 2.4	3 1/4 L	3.00D 3.50 D

LOAD CAPACITY BASED ON INFLATION PRESSURE AND SPEED

Bar Psi	6 87	8 116	10 145
Machine - use kg - lbs	COUNTERBALANCED LIFT TRUCK - STEER WHEEL		
STATIC	1230 2712	1420 3131	1650 3638
10 km/h 6 mp/h	1060 2337	1230 2712	1420 3131
25 km/h 15 mp/h	810 1786	940 2073	1090 2403
35 km/h 22 mp/h	750 1654	870 1918	1010 2227
Machine - use kg - lbs	COUNTERBALANCED LIFT TRUCK - LOAD WHEEL		
10 km/h 6 mp/h	1060 2337	1230 2712	1420 3131
25 km/h 15 mp/h	1060 2337	1230 2712	1420 3131
35 km/h 22 mp/h	1020 2249	1180 2602	1370 3021

MOUNTING ACCESSORIES AVAILABLE	Recommended rim	Tubeless bead seal [CAI]	Rubber ring [CAI]	Tube [CAI]	Flap [CAI]
	3 1/4 L	80TL8 [102150]	N/A	8 CG [566382]	90 - 8 [894130]

150/75 R8 113A5 TL	110087 55004	15 9.3	151 5.9	424 16.7	194 7.6	1287 50.7	16 20.2	174 6.9	8 2.1	4.33R	-

LOAD CAPACITY BASED ON INFLATION PRESSURE AND SPEED

Bar Psi	6 87	8 116	10 145
Machine - use kg - lbs	COUNTERBALANCED LIFT TRUCK - STEER WHEEL		
STATIC	1240 2734	1480 3263	1740 3837
10 km/h 6 mp/h	1070 2359	1280 2822	1500 3308
25 km/h 15 mp/h	820 1808	980 2161	1150 2536
35 km/h 22 mp/h	760 1676	910 2007	1070 2359
Machine - use kg - lbs	COUNTERBALANCED LIFT TRUCK - LOAD WHEEL		
10 km/h 6 mp/h	1070 2359	1280 2822	1500 3308
25 km/h 15 mp/h	1070 2359	1280 2822	1500 3308
35 km/h 22 mp/h	1030 2271	1230 2712	1440 3175

MOUNTING ACCESSORIES AVAILABLE	Recommended rim	Tubeless bead seal [CAI]	Rubber ring [CAI]	Tube [CAI]	Flap [CAI]
	4.33R	110TL8 [613972]	N/A	8 CG [566382]	90 - 8 [894130]

MICHELIN XZM



TECHNICAL CHARACTERISTICS

DESCRIPTION	CAI *[MSPN]*	Max.dist./ hour km *[mile]*	Section width mm *[in]*	Outer diameter mm *[in]*	Static load radius mm *[in]*	Rolling circumference mm *[in]*	Tread depth mm *[32rd]*	Dual spacing mm *[in]*	Cap liter *[gal]*	Measuring recommended rim	Other approved rims mm *[in]* *See end of document for more options*
180/70 R8 125A5 TL	110069 *64585*	15 *9.3*	170 *6.7*	454 *17.9*	205 *8.1*	1371 *54*	19 *23.9*	196 *7.7*	11 *2.9*	4.33R	-

LOAD CAPACITY BASED ON INFLATION PRESSURE AND SPEED									
Bar *Psi*		**6** *87*			**8** *116*			**10** *145*	
Machine - use **kg** - *lbs*		COUNTERBALANCED LIFT TRUCK - STEER WHEEL							
STATIC		**1890**	*4167*		**2190**	*4829*		**2500**	*5513*
10 km/h	*6 mp/h*	**1630**	*3594*		**1890**	*4167*		**2150**	*4741*
25 km/h	*15 mp/h*	**1250**	*2756*		**1450**	*3197*		**1650**	*3638*
35 km/h	*22 mp/h*	**1160**	*2558*		**1350**	*2977*		**1530**	*3374*
Machine - use **kg** - *lbs*		COUNTERBALANCED LIFT TRUCK - LOAD WHEEL							
10 km/h	*6 mp/h*	**1630**	*3594*		**1890**	*4167*		**2150**	*4741*
25 km/h	*15 mp/h*	**1630**	*3594*		**1890**	*4167*		**2150**	*4741*
35 km/h	*22 mp/h*	**1570**	*3462*		**1820**	*4013*		**2070**	*4564*

MOUNTING ACCESSORIES AVAILABLE	Recommended rim	Tubeless bead seal [CAI]	Rubber ring [CAI]	Tube [CAI]	Flap [CAI]
	4.33R	110TL8 [613972]	N/A	8 D [964067]	90 - 8 [894130]

MICHELIN XZM



TECHNICAL CHARACTERISTICS

DESCRIPTION	CAI [MSPN]	Max.dist./ hour km [mile]	Section width mm [in]	Outer diameter mm [in]	Static load radius mm [in]	Rolling circumference mm [in]	Tread depth mm [32rd]	Dual spacing mm [in]	Cap liter [gal]	Measuring recommended rim	Other approved rims mm [in] See end of document for more options
6.00 R9 121A5 TL	110204 50734	15 9.3	164 6.5	539 21.2	248 9.8	1641 64.6	24 30.2	192 7.6	15 4	4.00E	-

LOAD CAPACITY BASED ON INFLATION PRESSURE AND SPEED

Bar *Psi*	6 *87*	8 *116*	10 *145*
Machine - use kg - *lbs*	COUNTERBALANCED LIFT TRUCK - STEER WHEEL		
STATIC	1590 *3506*	1890 *4167*	2190 *4829*
10 km/h *6 mp/h*	1970 *3021*	1630 *3594*	1890 *4167*
25 km/h *15 mp/h*	1050 *2315*	1250 *2756*	1450 *3197*
35 km/h *22 mp/h*	980 *2161*	1160 *2558*	1350 *2977*
Machine - use kg - *lbs*	COUNTERBALANCED LIFT TRUCK - LOAD WHEEL		
10 km/h *6 mp/h*	1370 *3021*	1630 *3594*	1890 *4167*
25 km/h *15 mp/h*	1370 *3021*	1630 *3594*	1890 *4167*
35 km/h *22 mp/h*	1320 *2911*	1570 *3462*	1820 *4013*

MOUNTING ACCESSORIES AVAILABLE	Recommended rim	Tubeless bead seal [CAI]	Rubber ring [CAI]	Tube [CAI]	Flap [CAI]
	4.00E	100TL9 [102151]	N/A	9 F [368957]	125 - 9 [242079]

200/75 R9 134A5 TL	110090 79749	15 9.3	208 8.2	534 21	240 9.4	1610 63.4	22 27.7	239 9.4	19 5	6.00E	-

LOAD CAPACITY BASED ON INFLATION PRESSURE AND SPEED

Bar *Psi*	6 *87*	8 *116*	10 *145*
Machine - use kg - *lbs*	COUNTERBALANCED LIFT TRUCK - STEER WHEEL		
STATIC	2270 *5005*	2750 *6064*	3210 *7078*
10 km/h *6 mp/h*	1950 *4300*	2370 *5226*	2760 *6086*
25 km/h *15 mp/h*	1500 *3308*	1820 *4013*	2120 *4675*
35 km/h *22 mp/h*	1390 *3065*	1690 *3726*	1970 *4344*
Machine - use kg - *lbs*	COUNTERBALANCED LIFT TRUCK - LOAD WHEEL		
10 km/h *6 mp/h*	1950 *4300*	2370 *5226*	2760 *6086*
25 km/h *15 mp/h*	1950 *4300*	2370 *5226*	2760 *6086*
35 km/h *22 mp/h*	1880 *4145*	2280 *5027*	2650 *5843*

MOUNTING ACCESSORIES AVAILABLE	Recommended rim	Tubeless bead seal [CAI]	Rubber ring [CAI]	Tube [CAI]	Flap [CAI]
	6.00E	150TL9 [102182]	N/A	9 F [368957]	180-9 [698290]

MICHELIN XZM



TECHNICAL CHARACTERISTICS

DESCRIPTION	CAI [MSPN]	Max.dist./ hour km [mile]	Section width mm [in]	Outer diameter mm [in]	Static load radius mm [in]	Rolling circumference mm [in]	Tread depth mm [32rd]	Dual spacing mm [in]	Cap liter [gal]	Measuring recommended rim	Other approved rims mm [in] See end of document for more options
6.50 R10 128A5 TL	110213 54636	15 9.3	186 7.3	587 23.1	270 10.6	1786 70.3	27 34	217 8.5	20 5.3	5.00F	5.50F

LOAD CAPACITY BASED ON INFLATION PRESSURE AND SPEED				
Bar *Psi*		**6** *87*	**8** *116*	**10** *145*
Machine - use **kg** - *lbs*		COUNTERBALANCED LIFT TRUCK - STEER WHEEL		
STATIC		**1930** *4256*	**2310** *5094*	**2720** *5998*
10 km/h	*6 mp/h*	**1660** *3660*	**1990** *4388*	**2340** *5160*
25 km/h	*15 mp/h*	**1280** *2822*	**1530** *3374*	**1800** *3969*
35 km/h	*22 mp/h*	**1180** *2602*	**1420** *3131*	**1670** *3682*
Machine - use **kg** - *lbs*		COUNTERBALANCED LIFT TRUCK - LOAD WHEEL		
10 km/h	*6 mp/h*	**1660** *3660*	**1990** *4388*	**2340** *5160*
25 km/h	*15 mp/h*	**1660** *3660*	**1990** *4388*	**2340** *5160*
35 km/h	*22 mp/h*	**1600** *3528*	**1910** *4212*	**2250** *4961*

MOUNTING ACCESSORIES AVAILABLE	Recommended rim	Tubeless bead seal [CAI]	Rubber ring [CAI]	Tube [CAI]	Flap [CAI]
	5.00F	125TL10 [102183]	N/A	10 F [007946]	140 - 10 [001969]

225/75 R10 142A5 TL	110089 59673	15 9.3	220 8.7	591 23.3	264 10.4	1779 70	24 30.2	259 10.2	25 6.6	6.50F	-

LOAD CAPACITY BASED ON INFLATION PRESSURE AND SPEED				
Bar *Psi*		**6** *87*	**8** *116*	**10** *145*
Machine - use **kg** - *lbs*		COUNTERBALANCED LIFT TRUCK - STEER WHEEL		
STATIC		**2800** *6174*	**3430** *7563*	**4010** *8842*
10 km/h	*6 mp/h*	**2410** *5314*	**2960** *6527*	**3450** *7607*
25 km/h	*15 mp/h*	**1850** *4079*	**2270** *5005*	**2650** *5843*
35 km/h	*22 mp/h*	**1720** *3793*	**2100** *4631*	**2460** *5424*
Machine - use **kg** - *lbs*		COUNTERBALANCED LIFT TRUCK - LOAD WHEEL		
10 km/h	*6 mp/h*	**2410** *5314*	**2960** *6527*	**3450** *7607*
25 km/h	*15 mp/h*	**2410** *5314*	**2960** *6527*	**3450** *7607*
35 km/h	*22 mp/h*	**2320** *5116*	**2840** *6262*	**3320** *7321*

MOUNTING ACCESSORIES AVAILABLE	Recommended rim	Tubeless bead seal [CAI]	Rubber ring [CAI]	Tube [CAI]	Flap [CAI]
	6.50F	165TL10 [102114]	N/A	10 F [007946]	140 - 10 [001969]

MICHELIN XZM



TECHNICAL CHARACTERISTICS

DESCRIPTION	CAI [MSPN]	Max.dist./ hour km [mile]	Section width mm [in]	Outer diameter mm [in]	Static load radius mm [in]	Rolling circumference mm [in]	Tread depth mm [32rd]	Dual spacing mm [in]	Cap liter [gal]	Measuring recommended rim	Other approved rims mm [in] See end of document for more options
7.00 R12 136A5 TL	110195 71359	15 9.3	196 7.7	671 26.4	309 12.2	2043 80.4	28 35.3	230 9.1	24 6.3	5.00S	-

LOAD CAPACITY BASED ON INFLATION PRESSURE AND SPEED

Bar Psi	6 87	8 116	10 145
Machine - use kg - lbs	COUNTERBALANCED LIFT TRUCK - STEER WHEEL		
STATIC	2320 5116	2750 6064	3390 7475
10 km/h 6 mp/h	1990 4388	2370 5226	2920 6439
25 km/h 15 mp/h	1530 3374	1820 4013	2240 4939
35 km/h 22 mp/h	1420 3131	1690 3726	2080 4586
Machine - use kg - lbs	COUNTERBALANCED LIFT TRUCK - LOAD WHEEL		
10 km/h 6 mp/h	1990 4388	2370 5226	2920 6439
25 km/h 15 mp/h	1990 4388	2370 5226	2920 6439
35 km/h 22 mp/h	1920 4234	2280 5027	2800 6174

MOUNTING ACCESSORIES AVAILABLE	Recommended rim	Tubeless bead seal [CAI]	Rubber ring [CAI]	Tube [CAI]	Flap [CAI]
	5.00S	125TL12 [522788]	N/A	12 H [625614]	135 - 12 [190171]

250/60 R12 145A5 TL	358151 07263	15 9.3	254 10	616 24.3	280 11	1865 73.4	27 34	293 11.5	30 7.9	8.00G	-

LOAD CAPACITY BASED ON INFLATION PRESSURE AND SPEED

Bar Psi	6 87	8 116	10 145
Machine - use kg - lbs	COUNTERBALANCED LIFT TRUCK - STEER WHEEL		
STATIC	3060 6747	3700 8159	4380 9658
10 km/h 6 mp/h	2640 5821	3190 7034	3770 8313
25 km/h 15 mp/h	2030 4476	2450 5402	2900 6395
35 km/h 22 mp/h	1880 4145	2270 5005	2690 5931
Machine - use kg - lbs	COUNTERBALANCED LIFT TRUCK - LOAD WHEEL		
10 km/h 6 mp/h	2640 5821	3930 8666	4620 10187
25 km/h 15 mp/h	2640 5821	3930 8666	4620 10187
35 km/h 22 mp/h	2540 5601	3780 8335	4440 9790

MOUNTING ACCESSORIES AVAILABLE	Recommended rim	Tubeless bead seal [CAI]	Rubber ring [CAI]	Tube [CAI]	Flap [CAI]
	8.00G	200TL12 [787198]	N/A	12H [625614]	210 - 12 [030440]

MICHELIN XZM



TECHNICAL CHARACTERISTICS

DESCRIPTION	CAI *[MSPN]*	Max.dist./ hour km *[mile]*	Section width mm *[in]*	Outer diameter mm *[in]*	Static load radius mm *[in]*	Rolling circumference mm *[in]*	Tread depth mm *[32rd]*	Dual spacing mm *[in]*	Cap liter *[gal]*	Measuring recommended rim	Other approved rims mm *[in]* *See end of document for more options*
250/75 R12 152A5 TL	110108 *51744*	15 *9.3*	256 *10.1*	688 *27.1*	311 *12.2*	2078 *81.8*	28 *35.3*	294 *11.6*	38 *10*	8.00G	-

LOAD CAPACITY BASED ON INFLATION PRESSURE AND SPEED

Bar *Psi*		6 *87*	8 *116*	10 *145*
Machine - use kg - *lbs*		COUNTERBALANCED LIFT TRUCK - STEER WHEEL		
STATIC		3730 *8225*	4570 *10077*	5370 *11841*
10 km/h	*6 mp/h*	3220 *7100*	3930 *8666*	4620 *10187*
25 km/h	*15 mp/h*	2470 *5446*	3020 *6659*	3550 *7828*
35 km/h	*22 mp/h*	2290 *5049*	2800 *6174*	3290 *7254*
Machine - use kg - *lbs*		COUNTERBALANCED LIFT TRUCK - LOAD WHEEL		
10 km/h	*6 mp/h*	3220 *7100*	3930 *8666*	4620 *10187*
25 km/h	*15 mp/h*	3220 *7100*	3930 *8666*	4620 *10187*
35 km/h	*22 mp/h*	3090 *6813*	3780 *8335*	4440 *9790*

MOUNTING ACCESSORIES AVAILABLE	Recommended rim	Tubeless bead seal [CAI]	Rubber ring [CAI]	Tube [CAI]	Flap [CAI]
	8.00G	200TL12 [787198]	N/A	12 KD [188148]	210 - 12 [030440]

MICHELIN XZM



TECHNICAL CHARACTERISTICS

DESCRIPTION	CAI [MSPN]	Max.dist./ hour km [mile]	Section width mm [in]	Outer diameter mm [in]	Static load radius mm [in]	Rolling circumference mm [in]	Tread depth mm [32rd]	Dual spacing mm [in]	Cap liter [gal]	Measuring recommended rim	Other approved rims mm [in] See end of document for more options
7.00 R15 143A5 TL	110211 85869	15 9.3	196 7.7	733 28.9	337 13.3	2230 87.8	28 35.3	235 9.3	30 7.9	5.5	6.0

LOAD CAPACITY BASED ON INFLATION PRESSURE AND SPEED

Bar *Psi*	6 *87*	8 *116*	10 *145*
Machine - use kg - *lbs*	COUNTERBALANCED LIFT TRUCK - STEER WHEEL		
STATIC	**3075** *6780*	**3600** *7938*	**4090** *9018*
10 km/h *6 mp/h*	**2665** *5876*	**3120** *6880*	**3540** *7806*
25 km/h *15 mp/h*	**2050** *4520*	**2400** *5292*	**2725** *6009*
35 km/h *22 mp/h*	**1895** *4178*	**2220** *4895*	**2520** *5557*
Machine - use kg - *lbs*	COUNTERBALANCED LIFT TRUCK - LOAD WHEEL		
10 km/h *6 mp/h*	**2665** *5876*	**3120** *6880*	**3540** *7806*
25 km/h *15 mp/h*	**2665** *5876*	**3120** *6880*	**3540** *7806*
35 km/h *22 mp/h*	**2560** *5645*	**3000** *6615*	**3405** *7508*

MOUNTING ACCESSORIES AVAILABLE	Recommended rim	Tubeless bead seal [CAI]	Rubber ring [CAI]	Tube [CAI]	Flap [CAI]
	5.5	140TL15 [454346]	N/A	7.00 - 15 / 7.50 - 15 [812339]	180 - 15 [670236]

7.50 R15 146A5 TL	110214 62488	15 9.3	212 8.3	771 30.4	357 14.1	2352 92.6	30 37.8	254 10	38 10	6.0	6.5

LOAD CAPACITY BASED ON INFLATION PRESSURE AND SPEED

Bar *Psi*	6 *87*	8 *116*	10 *145*
Machine - use kg - *lbs*	COUNTERBALANCED LIFT TRUCK - STEER WHEEL		
STATIC	**3300** *7277*	**3930** *8666*	**4530** *9989*
10 km/h *6 mp/h*	**2840** *6262*	**3380** *7453*	**3900** *8600*
25 km/h *15 mp/h*	**2180** *4807*	**2600** *5733*	**3000** *6615*
35 km/h *22 mp/h*	**2020** *4454*	**2410** *5314*	**2780** *6130*
Machine - use kg - *lbs*	COUNTERBALANCED LIFT TRUCK - LOAD WHEEL		
10 km/h *6 mp/h*	**2840** *6262*	**3380** *7453*	**3900** *8600*
25 km/h *15 mp/h*	**2840** *6262*	**3380** *7453*	**3900** *8600*
35 km/h *22 mp/h*	**2730** *6020*	**3250** *7166*	**3750** *8269*

MOUNTING ACCESSORIES AVAILABLE	Recommended rim	Tubeless bead seal [CAI]	Rubber ring [CAI]	Tube [CAI]	Flap [CAI]
	6.0	150TL15 [702507]	N/A	7.00 - 15 / 7.50 - 15 [812339]	180 - 15 [670236]

MICHELIN XZM



TECHNICAL CHARACTERISTICS

DESCRIPTION	CAI [MSPN]	Max.dist./ hour km [mile]	Section width mm [in]	Outer diameter mm [in]	Static load radius mm [in]	Rolling circumference mm [in]	Tread depth mm [32rd]	Dual spacing mm [in]	Cap liter [gal]	Measuring recommended rim	Other approved rims mm [in] See end of document for more options
8.25 R15 153A5 TL	110218 56370	15 9.3	240 9.4	835 32.9	385 15.2	2543 100.1	33 41.6	280 11	46 12.2	6.5	7.0 7.5

LOAD CAPACITY BASED ON INFLATION PRESSURE AND SPEED

Bar *Psi*	6 *87*	8 *116*	10 *145*
Machine - use kg - *lbs*	COUNTERBALANCED LIFT TRUCK - STEER WHEEL		
STATIC	4010 *8842*	4760 *10496*	5520 *12172*
10 km/h *6 mp/h*	3450 *7607*	4100 *9041*	4750 *10474*
25 km/h *15 mp/h*	2650 *5843*	3150 *6946*	3650 *8048*
35 km/h *22 mp/h*	2460 *5424*	2920 *6439*	3380 *7453*
Machine - use kg - *lbs*	COUNTERBALANCED LIFT TRUCK - LOAD WHEEL		
10 km/h *6 mp/h*	3450 *7607*	4100 *9041*	4750 *10474*
25 km/h *15 mp/h*	3450 *7607*	4100 *9041*	4750 *10474*
35 km/h *22 mp/h*	3320 *7321*	3940 *8688*	4570 *10077*

MOUNTING ACCESSORIES AVAILABLE	Recommended rim	Tubeless bead seal [CAI]	Rubber ring [CAI]	Tube [CAI]	Flap [CAI]
	6.5	165TL15 [575769]	N/A	8.25 - 15 [694949]	180 - 15 [670236]

225/75 R15 149A5 TL	110079 55324	15 9.3	225 8.9	708 27.9	322 12.7	2144 84.4	25 31.5	259 10.2	34 9	7.0	-

LOAD CAPACITY BASED ON INFLATION PRESSURE AND SPEED

Bar *Psi*	6 *87*	8 *116*	10 *145*
Machine - use kg - *lbs*	COUNTERBALANCED LIFT TRUCK - STEER WHEEL		
STATIC	3480 *7673*	4230 *9327*	4910 *10827*
10 km/h *6 mp/h*	2990 *6593*	3640 *8026*	4230 *9327*
25 km/h *15 mp/h*	2300 *5072*	2800 *6174*	3250 *7166*
35 km/h *22 mp/h*	2130 *4697*	2590 *5711*	3010 *6637*
Machine - use kg - *lbs*	COUNTERBALANCED LIFT TRUCK - LOAD WHEEL		
10 km/h *6 mp/h*	2990 *6593*	3640 *8026*	4230 *9327*
25 km/h *15 mp/h*	2990 *6593*	3640 *8026*	4230 *9327*
35 km/h *22 mp/h*	2880 *6350*	3500 *7718*	4070 *8974*

MOUNTING ACCESSORIES AVAILABLE	Recommended rim	Tubeless bead seal [CAI]	Rubber ring [CAI]	Tube [CAI]	Flap [CAI]
	7.0	175TL15 [260511]	N/A	7.00 - 15 / 7.50 - 15 [812339]	180 - 15 [670236]

MICHELIN XZM



TECHNICAL CHARACTERISTICS

DESCRIPTION	CAI [MSPN]	Max.dist./ hour km [mile]	Section width mm [in]	Outer diameter mm [in]	Static load radius mm [in]	Rolling circumference mm [in]	Tread depth mm [32rd]	Dual spacing mm [in]	Cap liter [gal]	Measuring recommended rim	Other approved rims mm [in] See end of document for more options
250/70 R15 153A5 TL	110075 *50988*	15 *9.3*	250 *9.8*	736 *29*	333 *13.1*	2224 *87.6*	28 *35.3*	288 *11.3*	39 *10.3*	7.5	7.0

LOAD CAPACITY BASED ON INFLATION PRESSURE AND SPEED

Bar *Psi*		6 *87*	8 *116*	10 *145*
Machine - use kg - *lbs*		COUNTERBALANCED LIFT TRUCK - STEER WHEEL		
STATIC		3780 *8335*	4670 *10297*	5520 *12172*
10 km/h	*6 mp/h*	3250 *7166*	4020 *8864*	4750 *10474*
25 km/h	*15 mp/h*	2500 *5513*	3090 *6813*	3650 *8048*
35 km/h	*22 mp/h*	2320 *5116*	2860 *6306*	3380 *7453*
Machine - use kg - *lbs*		COUNTERBALANCED LIFT TRUCK - LOAD WHEEL		
10 km/h	*6 mp/h*	3250 *7166*	4020 *8864*	4750 *10474*
25 km/h	*15 mp/h*	3250 *7166*	4020 *8864*	4750 *10474*
35 km/h	*22 mp/h*	3130 *6902*	3870 *8533*	4570 *10077*

MOUNTING ACCESSORIES AVAILABLE	Recommended rim	Tubeless bead seal [CAI]	Rubber ring [CAI]	Tube [CAI]	Flap [CAI]
	7.5	190TL15 [464164]	N/A	7.00 - 15 / 7.50 - 15 [812339]	180 - 15 [670236]

315/70 R15 165A5 TL	110109 *85047*	15 *9.3*	321 *12.6*	839 *33*	373 *14.7*	2520 *99.2*	35 *44.1*	369 *14.5*	74 *19.6*	8.0	-

LOAD CAPACITY BASED ON INFLATION PRESSURE AND SPEED

Bar *Psi*		6 *87*	8 *116*	10 *145*
Machine - use kg - *lbs*		COUNTERBALANCED LIFT TRUCK - STEER WHEEL		
STATIC		5370 *11841*	6570 *14487*	7780 *17155*
10 km/h	*6 mp/h*	4620 *10187*	5660 *12480*	6700 *14774*
25 km/h	*15 mp/h*	3550 *7828*	4350 *9592*	5150 *11356*
35 km/h	*22 mp/h*	3290 *7254*	4030 *8886*	4770 *10518*
Machine - use kg - *lbs*		COUNTERBALANCED LIFT TRUCK - LOAD WHEEL		
10 km/h	*6 mp/h*	4620 *10187*	5660 *12480*	6700 *14774*
25 km/h	*15 mp/h*	4620 *10187*	5660 *12480*	6700 *14774*
35 km/h	*22 mp/h*	4440 *9790*	5440 *11995*	6440 *14200*

MOUNTING ACCESSORIES AVAILABLE	Recommended rim	Tubeless bead seal [CAI]	Rubber ring [CAI]	Tube [CAI]	Flap [CAI]
	8.0	200TL15 [609679]	N/A	8.25 - 15 [694949]	260 - 15 [751612]

MICHELIN XZM



TECHNICAL CHARACTERISTICS

DESCRIPTION	CAI *[MSPN]*	Max.dist./ hour km *[mile]*	Section width mm *[in]*	Outer diameter mm *[in]*	Static load radius mm *[in]*	Rolling circumference mm *[in]*	Tread depth mm *[32rd]*	Dual spacing mm *[in]*	Cap liter *[gal]*	Measuring recommended rim	Other approved rims mm *[in]* *See end of document for more options*
355/65 R15 170A5 TL	003789 *81758*	15 *9.3*	355 *14*	842 *33.1*	376 *14.8*	2532 *99.7*	35 *44.1*	408 *16.1*	83 *21.9*	9.75	-

LOAD CAPACITY BASED ON INFLATION PRESSURE AND SPEED

Bar *Psi*		6 *87*	8 *116*	10 *145*
Machine - use kg - *lbs*		COUNTERBALANCED LIFT TRUCK - STEER WHEEL		
STATIC		**6190** *13649*	**7630** *16824*	**9060** *19977*
10 km/h	*6 mp/h*	**5330** *11753*	**6565** *14476*	**7800** *17199*
25 km/h	*15 mp/h*	**4100** *9041*	**5050** *11135*	**6000** *13230*
35 km/h	*22 mp/h*	**3800** *8379*	**4670** *10297*	**5550** *12238*
Machine - use kg - *lbs*		COUNTERBALANCED LIFT TRUCK - LOAD WHEEL		
10 km/h	*6 mp/h*	**5330** *11753*	**6565** *14476*	**7800** *17199*
25 km/h	*15 mp/h*	**5330** *11753*	**6565** *14476*	**7800** *17199*
35 km/h	*22 mp/h*	**5130** *11312*	**6310** *13914*	**7500** *16538*

MOUNTING ACCESSORIES AVAILABLE	Recommended rim	Tubeless bead seal [CAI]	Rubber ring [CAI]	Tube [CAI]	Flap [CAI]
	9.75	250TL15 [026320]	N/A	N/A	N/A

MICHELIN XZM



TECHNICAL CHARACTERISTICS

DESCRIPTION	CAI [MSPN]	Max.dist./ hour km [mile]	Section width mm [in]	Outer diameter mm [in]	Static load radius mm [in]	Rolling circumference mm [in]	Tread depth mm [32rd]	Dual spacing mm [in]	Cap liter [gal]	Measuring recommended rim	Other approved rims mm [in] See end of document for more options
9.00 R20 160A5 TL	110185 87259	15 9.3	271 10.7	1033 40.7	481 18.9	3157 124.3	33 41.6	325 12.8	99 26.2	7.0	6.5, 7.0T, 7.33V, 7.5, B6.5, B7.5, B7.0

LOAD CAPACITY BASED ON INFLATION PRESSURE AND SPEED

Bar *Psi*	6 *87*	8 *116*	10 *145*
Machine - use kg - *lbs*	COUNTERBALANCED LIFT TRUCK - STEER WHEEL		
STATIC	4840 *10672*	5800 *12789*	6800 *14994*
10 km/h *6 mp/h*	4160 *9173*	5000 *11025*	5850 *12899*
25 km/h *15 mp/h*	3200 *7056*	3840 *8467*	4500 *9923*
35 km/h *22 mp/h*	2970 *6549*	3560 *7850*	4170 *9195*
40 km/h *25 mp/h*	2850 *6284*	3420 *7541*	4010 *8842*
Machine - use kg - *lbs*	COUNTERBALANCED LIFT TRUCK - LOAD WHEEL		
10 km/h *6 mp/h*	4160 *9173*	5000 *11025*	5850 *12899*
25 km/h *15 mp/h*	4160 *9173*	5000 *11025*	5850 *12899*
35 km/h *22 mp/h*	4000 *8820*	4800 *10584*	5620 *12392*

MOUNTING ACCESSORIES AVAILABLE	Recommended rim	Tubeless bead seal [CAI]	Rubber ring [CAI]	Tube [CAI]	Flap [CAI]
	7.0	175TL20 [102087]	A20 [553004]	8.25 - 20 [437622]	185 - 20 [907771]

10.00 R20 166A5 TL	110014 42890	15 9.3	295 11.6	1068 42	495 19.5	3257 128.2	35 44.1	354 13.9	117 30.9	7.5	7.0, 7.0T, 7.33V, 8.0, 8.00V, 8.0V, B7.0, B7.5, B8.0

LOAD CAPACITY BASED ON INFLATION PRESSURE AND SPEED

Bar *Psi*	6 *87*	8 *116*	10 *145*
Machine - use kg - *lbs*	COUNTERBALANCED LIFT TRUCK - STEER WHEEL		
STATIC	5740 *12657*	6850 *15104*	8010 *17662*
10 km/h *6 mp/h*	4940 *10893*	5890 *12987*	6890 *15192*
25 km/h *15 mp/h*	3800 *8379*	4530 *9989*	5300 *11687*
35 km/h *22 mp/h*	3520 *7762*	4200 *9261*	4910 *10827*
40 km/h *25 mp/h*	3390 *7475*	4040 *8908*	4720 *10408*
Machine - use kg - *lbs*	COUNTERBALANCED LIFT TRUCK - LOAD WHEEL		
10 km/h *6 mp/h*	4940 *10893*	5890 *12987*	6890 *15192*
25 km/h *15 mp/h*	4940 *10893*	5890 *12987*	6890 *15192*
35 km/h *22 mp/h*	4750 *10474*	5660 *12480*	6630 *14619*

MOUNTING ACCESSORIES AVAILABLE	Recommended rim	Tubeless bead seal [CAI]	Rubber ring [CAI]	Tube [CAI]	Flap [CAI]
	7.5	190TL20 [102083]	A20 [553004]	9.00 - 20 [052341]	200 - 20 [299014]

MICHELIN XZM



TECHNICAL CHARACTERISTICS

DESCRIPTION	CAI [MSPN]	Max.dist./ hour km [mile]	Section width mm [in]	Outer diameter mm [in]	Static load radius mm [in]	Rolling circumference mm [in]	Tread depth mm [32rd]	Dual spacing mm [in]	Cap liter [gal]	Measuring recommended rim	Other approved rims mm [in] See end of document for more options
11.00 R20 169A5 TL	110189 74767	15 9.3	294 11.6	1092 43	504 19.8	3325 130.9	38 47.9	353 13.9	124 32.8	8.0	7.33V, 7.5, 8.00V, 8.0V, 8.5, 8.50V, 8.5V, B7.5, B8.0, B8.5

LOAD CAPACITY BASED ON INFLATION PRESSURE AND SPEED

Bar Psi		6 87	8 116	10 145
Machine - use kg - lbs		COUNTERBALANCED LIFT TRUCK - STEER WHEEL		
STATIC		6260 13803	7510 16560	8760 19316
10 km/h	6 mp/h	5390 11885	6470 14266	7540 16626
25 km/h	15 mp/h	4140 9129	4970 10959	5800 12789
35 km/h	22 mp/h	3830 8445	4600 10143	5370 11841
40 km/h	25 mp/h	3690 8136	4430 9768	5170 11400
Machine - use kg - lbs		COUNTERBALANCED LIFT TRUCK - LOAD WHEEL		
10 km/h	6 mp/h	5390 11885	6470 14266	7540 16626
25 km/h	15 mp/h	5390 11885	6470 14266	7540 16626
35 km/h	22 mp/h	5180 11422	6220 13715	7250 15986

MOUNTING ACCESSORIES AVAILABLE	Recommended rim	Tubeless bead seal [CAI]	Rubber ring [CAI]	Tube [CAI]	Flap [CAI]
	8.0	200TL20 [102085]	A20 [553004]	10.00 - 20 [300462]	200 - 20 [299014]

12.00 R20 176A5 TL	110082 78891	15 9.3	324 12.8	1136 44.7	522 20.6	3453 135.9	40 50.4	389 15.3	184 48.6	8.5	8.0, 8.50V, 8.5V, 9.0, 9.00V, B8.5

LOAD CAPACITY BASED ON INFLATION PRESSURE AND SPEED

Bar Psi		6 87	8 116	10 145
Machine - use kg - lbs		COUNTERBALANCED LIFT TRUCK - STEER WHEEL		
STATIC		7710 17001	9220 20330	10730 23660
10 km/h	6 mp/h	6630 14619	7930 17486	9230 20352
25 km/h	15 mp/h	5100 11246	6100 13451	7100 15656
35 km/h	22 mp/h	4720 10408	5650 12458	6570 14487
40 km/h	25 mp/h	4540 10011	5430 11973	6320 13936
Machine - use kg - lbs		COUNTERBALANCED LIFT TRUCK - LOAD WHEEL		
10 km/h	6 mp/h	6630 14619	7930 17486	9230 20352
25 km/h	15 mp/h	6630 14619	7930 17486	9230 20352
35 km/h	22 mp/h	6380 14068	7630 16824	8880 19580

MOUNTING ACCESSORIES AVAILABLE	Recommended rim	Tubeless bead seal [CAI]	Rubber ring [CAI]	Tube [CAI]	Flap [CAI]
	8.5	215TL20 [102086]	A20 [553004]	11.00 - 20 / 12.00 - 20 [179572]	200 - 20 [299014]

MICHELIN XZM



TECHNICAL CHARACTERISTICS

DESCRIPTION	CAI [MSPN]	Max.dist./ hour km [mile]	Section width mm [in]	Outer diameter mm [in]	Static load radius mm [in]	Rolling circumference mm [in]	Tread depth mm [32rd]	Dual spacing mm [in]	Cap liter [gal]	Measuring recommended rim	Other approved rims mm [in] See end of document for more options
12.00 R24 178A5 TL	110296 42105	15 9.3	325 12.8	1238 48.7	570 22.4	3766 148.3	40 50.4	390 15.4	208 55	8.5	8.50V, 9.0, 9.00V, B8.5

LOAD CAPACITY BASED ON INFLATION PRESSURE AND SPEED

Bar Psi	6 87	8 116	10 145
Machine - use kg - lbs	COUNTERBALANCED LIFT TRUCK - STEER WHEEL		
STATIC	7710 17001	9520 20992	11330 24983
10 km/h 6 mp/h	6630 14619	8190 18059	9750 21499
25 km/h 15 mp/h	5100 11246	6300 13892	7500 16538
35 km/h 22 mp/h	4720 10408	5830 12855	6940 15303
Machine - use kg - lbs	COUNTERBALANCED LIFT TRUCK - LOAD WHEEL		
10 km/h 6 mp/h	6630 14619	8190 18059	9750 21499
25 km/h 15 mp/h	6630 14619	8190 18059	9750 21499
35 km/h 22 mp/h	6380 14068	7880 17375	9380 20683

MOUNTING ACCESSORIES AVAILABLE	Recommended rim	Tubeless bead seal [CAI]	Rubber ring [CAI]	Tube [CAI]	Flap [CAI]
	8.5	N/A	G25 (R1237) [553012]	12.00 - 24 [128293]	250 - 24 [025752]

14.00 R24 193A5 TL	084179 93269	15 9.3	383 15.1	1416 55.7	641 25.2	4280 168.5	63 79.4	460 18.1	247 65.3	10.0	10.00W, 10.00WA

LOAD CAPACITY BASED ON INFLATION PRESSURE AND SPEED

Bar Psi	6 87	8 116	10 145
Machine - use kg - lbs	COUNTERBALANCED LIFT TRUCK - STEER WHEEL		
STATIC	12540 27651	15100 33296	17370 38301
10 km/h 6 mp/h	10790 23792	13000 28665	14950 32965
25 km/h 15 mp/h	8300 18302	10000 22050	11500 25358
Machine - use kg - lbs	COUNTERBALANCED LIFT TRUCK - LOAD WHEEL		
10 km/h 6 mp/h	10790 23792	13000 28665	14950 32965
25 km/h 15 mp/h	10790 23792	13000 28665	14950 32965

MOUNTING ACCESSORIES AVAILABLE	Recommended rim	Tubeless bead seal [CAI]	Rubber ring [CAI]	Tube [CAI]	Flap [CAI]
	10.0	N/A	OR 3-25 SULLA [553200]	14.00 - 24 [320195]	250 - 24 [025752]

MICHELIN XZM



TECHNICAL CHARACTERISTICS

DESCRIPTION	CAI *[MSPN]*	Max.dist./ hour km *[mile]*	Section width mm *[in]*	Outer diameter mm *[in]*	Static load radius mm *[in]*	Rolling circumference mm *[in]*	Tread depth mm *[32rd]*	Dual spacing mm *[in]*	Cap liter *[gal]*	Measuring recommended rim	Other approved rims mm *[in]* *See end of document for more options*
16.00 R25 200A5 TL	123781 *61590*	15 *9.3*	443 *17.4*	1531 *60.3*	695 *27.4*	4634 *182.4*	71 *89.4*	532 *20.9*	326 *86.1*	11.25/2.0	13.00/2.0

LOAD CAPACITY BASED ON INFLATION PRESSURE AND SPEED									
Bar *Psi*		**6** *87*			**8** *116*			**10** *145*	
Machine - use **kg** - *lbs*		COUNTERBALANCED LIFT TRUCK - STEER WHEEL							
STATIC		**15600**	*34398*		**18225**	*40186*		**21000**	*46305*
10 km/h	*6 mp/h*	**13520**	*29812*		**15800**	*34839*		**18200**	*40131*
25 km/h	*15 mp/h*	**10400**	*22932*		**12150**	*26791*		**14000**	*30870*
Machine - use **kg** - *lbs*		COUNTERBALANCED LIFT TRUCK - LOAD WHEEL							
10 km/h	*6 mp/h*	**13520**	*29812*		**15800**	*34839*		**18200**	*40131*
25 km/h	*15 mp/h*	**13520**	*29812*		**15800**	*34839*		**18200**	*40131*

MOUNTING ACCESSORIES AVAILABLE	Recommended rim	Tubeless bead seal [CAI]	Rubber ring [CAI]	Tube [CAI]	Flap [CAI]
	11.25/2.0	N/A	OR 3-25 SULLA [553200]	N/A	N/A

NOTES

MICHELIN XZM 2+



1 TREADLIFE

15% longer service life [1]
The combination of massive tread pattern with a low abrasion rubber compound optimizes wear resistance and provides longer tire life.

2 ROBUSTNESS

Maximize machine uptime with high resistance to impact and puncture
The IND5 technology improves the tire structure and offers additional sidewall protection.

3 PRODUCTIVITY

Drive up to 10 km in an hour at 25 km/h [2]
Radial technology is usually the best alternative for operations requiring more productivity with the transport of more tons per hour.

TIRE CHARACTERISTICS



ADDITIONAL INFORMATION

VEHICLE EQUIPMENT







The XZM2+ range has been developed to offer more robustness and to maximize productivity. It remains a highly versatile solution for reach stacker, offering an extended wear life for operations.

- Michelin Port Tires Product Manager

[1] Compared with the same sized Michelin XZM tire under normal use.
[2] Characteristic of the product measured with the TKPH indicator. Distance per hour is directly correlated to the amount of tons transportable in an hour.

LEARN MORE

ON THE WEB
business.michelin.co.uk

TESTIMONIALS
youtube.com/michelinearthmover

TOOLS

BEYOND ROAD SELECTOR
beyond-road.selector.michelingroup.com/mh

CONTACT

Please contact your local sales representative for more information.

MICHELIN XZM2+



TECHNICAL CHARACTERISTICS

DESCRIPTION	CAI [MSPN]	Max.dist./ hour km [mile]	Section width mm [in]	Outer diameter mm [in]	Static load radius mm [in]	Rolling circumference mm [in]	Tread depth mm [32rd]	Dual spacing mm [in]	Cap liter [gal]	Measuring recommended rim	Other approved rims mm [in] See end of document for more options
18.00 R25 XZM2+A 207A5 TL	578448 98640	10 6.2	503 19.8	1668 65.7	751 29.6	5032 198.1	78 98.3	612 24.1	470 124.2	13.00/2.5	15.00/2.5

LOAD CAPACITY BASED ON INFLATION PRESSURE AND SPEED

Bar Psi	6 87	8 116	10 145
Machine - use kg - lbs	MECHANICAL HANDLING, CYCLIC SERVICE: Side loaders and forklift trucks steer axle		
STATIC	18380 40528	22280 49127	26250 57881
10 km/h 6 mph	15930 35126	19180 42292	22750 50164
25 km/h 15 mph	12250 27011	14750 32524	17500 38588
Machine - use kg - lbs	MECHANICAL HANDLING, CYCLIC SERVICE: Forklift trucks drive axle		
10 km/h 6 mph	15930 35126	19180 42292	22750 50164
25 km/h 15 mph	15930 35126	19180 42292	22750 50164

MOUNTING ACCESSORIES AVAILABLE	Recommended rim	Tubeless bead seal [CAI]	Rubber ring [CAI]	Tube [CAI]	Flap [CAI]
	13.00/2.5	N/A	OR 3-25 SULLA [553200]	25 WAM [944085]	16-24/25

18.00 R33 XZM2+ 214A5 TL	305696 98655	10 6.2	503 19.8	1841 72.5	826 32.5	5547 218.4	78 98.3	604 23.8	520 137.4	13.00/2.5	-

LOAD CAPACITY BASED ON INFLATION PRESSURE AND SPEED

Bar Psi	6 87	8 116	10 145
Machine - use kg - lbs	COUNTERBALANCED LIFT TRUCK - STEER WHEEL		
STATIC	22500 49613	27000 59535	31800 70119
10 km/h 6 mph	19500 42998	23400 51597	27560 60770
25 km/h 15 mph	15000 33075	18000 39690	21200 46746
Machine - use kg - lbs	COUNTERBALANCED LIFT TRUCK - LOAD WHEEL		
10 km/h 6 mph	19500 42998	23400 51597	27560 60770
25 km/h 15 mph	19500 42998	23400 51597	27560 60770

MOUNTING ACCESSORIES AVAILABLE	Recommended rim	Tubeless bead seal [CAI]	Rubber ring [CAI]	Tube [CAI]	Flap [CAI]
	13.00/2.5	N/A	OR 3-33 [553203]	N/A	N/A

MICHELIN X STACKER 2



1 TREADLIFE

7% more wear life [1]
The unique Michelin Dual Compound delivers longer lasting tires.

2 ROBUSTNESS

Excellent wheel interface
Introduction of new Michelin B²® technology.

3 PRODUCTIVITY

Drive up to 7 km in an hour at 25 km/h [2]
Radial technology is usually the best alternative for operations requiring more productivity with the transport of more tons per hour.

TIRE CHARACTERISTICS



ADDITIONAL INFORMATION

VEHICLE EQUIPMENT







The X STACKER 2 delivers impressive hourly performance. This smooth IND5 radial tire offers extra life especially for stacking operations. It provides exceptional robustness and remarkable resistance to aggression.

- Michelin Port Tires Product Manager

[1] Compared to Michelin X STACKER 18.00R25 tire based on field service evaluation, 2013-2014, in customer port sites; same size and usages.
[2] Compared to Michelin X STACKER 18.00R25 tire. Characteristic of the product measured with the TKPH indicator. Distance per hour is directly correlated to the amount of tons transportable in an hour.

LEARN MORE

ON THE WEB
business.michelin.co.uk

TESTIMONIALS
youtube.com/michelinearthmover

TOOLS

BEYOND ROAD SELECTOR
beyond-road.selector.michelingroup.com/mh

CONTACT

Please contact your local sales representative for more information.

MICHELIN X STACKER 2



TECHNICAL CHARACTERISTICS

DESCRIPTION	CAI [MSPN]	Max.dist./ hour km [mile]	Section width mm [in]	Outer diameter mm [in]	Static load radius mm [in]	Rolling circumference mm [in]	Tread depth mm [32rd]	Dual spacing mm [in]	Cap liter [gal]	Measuring recommended rim	Other approved rims mm [in] See end of document for more options
18.00 R25 207A5 TL	101475 *26910*	7 *4.3*	501 *19.7*	1656 *65.2*	750 *29.5*	5006 *197.1*	72 *90.7*	612 *24.1*	465 *122.9*	13.00/2.5	15.00/2.5

LOAD CAPACITY BASED ON INFLATION PRESSURE AND SPEED

Bar *Psi*	6 *87*	8 *116*	10 *145*
Machine - use **kg** - *lbs*	COUNTERBALANCED LIFT TRUCK - STEER WHEEL		
STATIC	18380 *40528*	22280 *49127*	26250 *57881*
10 km/h *6 mph*	15930 *35126*	19180 *42292*	22750 *50164*
25 km/h *15 mph*	12250 *27011*	14750 *32524*	17500 *38588*
Machine - use **kg** - *lbs*	COUNTERBALANCED LIFT TRUCK - LOAD WHEEL		
10 km/h *6 mph*	15930 *35126*	19180 *42292*	22750 *50164*
25 km/h *15 mph*	15930 *35126*	19180 *42292*	22750 *50164*

MOUNTING ACCESSORIES AVAILABLE	Recommended rim	Tubeless bead seal [CAI]	Rubber ring [CAI]	Tube [CAI]	Flap [CAI]
	13.00/2.5	N/A	OR 3-25 SULLA [553200]	25 WAM [944085]	16-24/25

MICHELIN X STACKER 3 HD



1 ROBUSTNESS

Extra service life in heavy duty conditions [1]
Radial structure optimized to endure heavy duty cycles.

2 PRODUCTIVITY

Drive up to 12 km in an hour at 25 km/h [2]
Radial technology is usually the best alternative for operations requiring more productivity with the transport of more tons per hour.

3 TREADLIFE

Reduce downtime with reliable wear life projection [3]
Tread wear indicator is now optimized to secure wear life projection and allows to plan the maintenance accordingly.

TIRE CHARACTERISTICS



ADDITIONAL INFORMATION

VEHICLE EQUIPMENTS







> Port operators with wide fleets of several reach stackers often operate under tough conditions of load and speed to meet their productivity challenges. Their concern is unexpected machine downtime and they are specifically looking for tires that can help meet these challenges.
>
> *- Michelin Port Tires Product Manager*

[1] Compared to XZM2+ and XZM2+A that may be removed with 40% rubber remaining under severe condition. X STACKER 3 HD removed after being 100% worn, resulting in up to 30% extra life time. Data based on quality records, obtained from port operators, between 2017 and 2022.
[2] Compared to MICHELIN® 18.00R25 XZM2+ and X STACKER 2 : respective max distance of 10 and 7 km in one hour at 25 km/h max speed. Distance per hour is directly correlated to the amount of tons transportable in an hour.
[3] Compared to MICHELIN® 18.00R25 XZM2+/XZM2+A and X STACKER 2 LC. Field study in real life conditions made by Michelin during 7 years in a representative panel of operating terminals in Australia, Europe and Middle East; same size and usages.

LEARN MORE

ON THE WEB
business.michelin.co.uk

TESTIMONIALS
youtube.com/michelinearthmover

TOOLS

BEYOND ROAD SELECTOR
beyond-road.selector.michelingroup.com/mh

CONTACT

Please contact your local sales representative for more information.

MICHELIN X STACKER 3 HD



TECHNICAL CHARACTERISTICS

DESCRIPTION	CAI [MSPN]	Max.dist./ hour km [mile]	Section width mm [in]	Outer diameter mm [in]	Static load radius mm [in]	Rolling circumference mm [in]	Tread depth mm [32rd]	Dual spacing mm [in]	Cap liter [gal]	Measuring recommended rim	Other approved rims mm [in] See end of document for more options
18.00 R 25 207A5 TL	397347 07703	12 7.5	503 19.8	1659 65.3	740 29.1	4986 196.3	53 66.8	600 23.6	489 129.2	13.00/2.5	15.00/2.5

LOAD CAPACITY BASED ON INFLATION PRESSURE AND SPEED

Bar *Psi*	6 *87*	8 *116*	10 *145*
Machine - use kg - *lbs*	COUNTERBALANCED LIFT TRUCK - STEER WHEEL		
STATIC	18380 *40528*	22280 *49127*	26250 *57881*
10 km/h *6 mph*	15930 *35126*	19180 *42292*	22750 *50164*
25 km/h *15 mph*	12250 *27011*	14750 *32524*	17500 *38588*
Machine - use kg - *lbs*	COUNTERBALANCED LIFT TRUCK - LOAD WHEEL		
10 km/h *6 mph*	15930 *35126*	19180 *42292*	22750 *50164*
25 km/h *15 mph*	15930 *35126*	19180 *42292*	22750 *50164*

MOUNTING ACCESSORIES AVAILABLE	Recommended rim	Tubeless bead seal [CAI]	Rubber ring [CAI]	Tube [CAI]	Flap [CAI]
	13.00/2.5	N/A	OR 3-25 SULLA [553200]	25 WAM [944085]	16-24/25

18.00 R 33 214A5 TL	530318 7703	12 7.5	487 19.2	1850 72.8	828 32.6	5568 219.2	66 83	604 23.8	506 17.9	13.00/2.5	

LOAD CAPACITY BASED ON INFLATION PRESSURE AND SPEED

Bar *Psi*	6 *87*	8 *116*	10 *145*
Machine - use kg - *lbs*	COUNTERBALANCED LIFT TRUCK - STEER WHEEL		
STATIC	22500 *49613*	27000 *59535*	31800 *70119*
10 km/h *6 mph*	19500 *42998*	23400 *51597*	27560 *60770*
25 km/h *15 mph*	15000 *33075*	18000 *39690*	21200 *46746*
Machine - use kg - *lbs*	COUNTERBALANCED LIFT TRUCK - LOAD WHEEL		
10 km/h *6 mph*	19500 *42998*	23400 *51597*	27560 *60770*
25 km/h *15 mph*	19500 *42998*	23400 *51597*	27560 *60770*

MOUNTING ACCESSORIES AVAILABLE	Recommended rim	Tubeless bead seal [CAI]	Rubber ring [CAI]	Tube [CAI]	Flap [CAI]
	13.00/2.5	N/A	OR 3-33 [553203]	N/A	N/A

MICHELIN X STRADDLE 2



1 TREADLIFE

15% more wear life [1]
The massive tread design with 8% more rubber insure the longest tire life.

2 LOAD CAPACITY

Carry up to 18 tons per tire [2]
Due to an addition of 20% tire inner air volume.

3 PRODUCTIVITY

Drive up to 15 km in an hour at 25 km/h [3]
Radial technology is usually the best alternative for operations requiring more productivity with the transport of more tons per hour.

TIRE CHARACTERISTICS



ADDITIONAL INFORMATION

VEHICLE EQUIPMENT



X STRADDLE 2 offers extended life with heavy load and high speed. Some terminals have confirmed reduced tire maintenance.

- Michelin Port Tires Product Manager

[1] Compared to MICHELIN X STRADDLE 480/95R25, average performance by port site, between 2008-2012. Projected improvement in tire life based on field performance in customer port sites of the MICHELIN X STRADDLE 2 450/95R25 compared to the MICHELIN X STRADDLE 16.00R25, that included individual design improvements incorporated into the MICHELIN X STRADDLE 2 480/95R25.
[2] At the nominal pressure of 10 bars and carry 17 Tons from 22km/h to 25km/h. The addition of tire inner volume is compared to MICHELIN X STRADDLE 16.00R25 and MICHELIN X STRADDLE 2 450/95R25 tires.
[3] Compared to MICHELIN X STRADDLE 480/95R25: max distance of 12 kilometers in one hour and 30 mi/h max speed. Characteristic of the product measured with the TKPH indicator. Distance per hour is directly correlated to the amount of tons transportable in an hour.

LEARN MORE

ON THE WEB
business.michelin.co.uk

TESTIMONIALS
youtube.com/michelinearthmover

TOOLS

BEYOND ROAD SELECTOR
beyond-road.selector.michelingroup.com/mh

CONTACT

Please contact your local sales representative for more information.

MICHELIN X STRADDLE 2



TECHNICAL CHARACTERISTICS

DESCRIPTION	CAI [MSPN]	Max.dist./ hour km [mile]	Section width mm [in]	Outer diameter mm [in]	Static load radius mm [in]	Rolling circumference mm [in]	Tread depth mm [32rd]	Dual spacing mm [in]	Cap liter [gal]	Measuring recommended rim	Other approved rims mm [in] See end of document for more options
450/95 R25 202A7 TL	278967 38706	15 9.3	422 16.6	1510 59.4	670 26.4	4530 178.3	50 63	- -	342 90.4	11.25/2.0	13.00/2.0

LOAD CAPACITY BASED ON INFLATION PRESSURE AND SPEED

Bar Psi		6 87	8 116	10 145
Machine - use kg - lbs		STRADDLE CARRIER		
22 km/h	14 mph	10630 23439	13150 28996	15750 34729
25 km/h	16 mph	10125 22326	12525 27618	15000 33075
35 km/h	22 mph	9370 20661	11590 25556	13875 30594

MOUNTING ACCESSORIES AVAILABLE	Recommended rim	Tubeless bead seal [CAI]	Rubber ring [CAI]	Tube [CAI]	Flap [CAI]
	11.25/2.0	N/A	OR 3-25 SULLA [553200]	N/A	N/A

480/95 R25 206A7 TL	653072 07011	15 9.3	467 18.4	1553 61.1	687 27	4655 183.3	50 63	580 22.8	410 108.3	13.00/2.5	11.25/2.0 [1.7]

LOAD CAPACITY BASED ON INFLATION PRESSURE AND SPEED

Bar Psi		6 87	8 116	10 145
Machine - use kg - lbs		STRADDLE CARRIER		
22 km/h	14 mph	11970 26394	14900 32855	17850 39359
25 km/h	16 mph	11400 25137	14200 31311	17000 37485
35 km/h	22 mph	10545 23252	13135 28963	15725 34674

MOUNTING ACCESSORIES AVAILABLE	Recommended rim	Tubeless bead seal [CAI]	Rubber ring [CAI]	Tube [CAI]	Flap [CAI]
	13.00/2.5	N/A	OR 3-25 SULLA [553200]	N/A	N/A

480/95 R25 206A7 TL CC	723367 07011	15 9.3	467 18.4	1553 61.1	687 27	4655 183.3	50 63	580 22.8	410 108.3	13.00/2.5	11.25/2.0 [1.7]

LOAD CAPACITY BASED ON INFLATION PRESSURE AND SPEED

Bar Psi		6 87	8 116	10 145
Machine - use kg - lbs		STRADDLE CARRIER (INTENSE USAGE)		
22 km/h	14 mph	11970 26394	14900 32855	17850 39359
25 km/h	16 mph	11400 25137	14200 31311	17000 37485
35 km/h	22 mph	10545 23252	13135 28963	15725 34674

MOUNTING ACCESSORIES AVAILABLE	Recommended rim	Tubeless bead seal [CAI]	Rubber ring [CAI]	Tube [CAI]	Flap [CAI]
	13.00/2.5	N/A	OR 3-25 SULLA [553200]	N/A	N/A

MICHELIN X TERMINAL T



1 VERSATILITY

Simplify your operations
Equip all terminal tractors and trailers with the same size and tread.

2 PRODUCTIVITY

Minimize downtime
Tubeless tire with steel radial structure. This construction provides high puncture resistance.

3 SAFETY

High level of grip for an excellent performance on wet ground
Radial structure with optimized tread pattern for enhanced ground contact (additionnal antistatic properties).

TIRE CHARACTERISTICS



ADDITIONAL INFORMATION

VEHICLE EQUIPMENT







The X TERMINAL T is the leading solution in combining exceptional puncture resistance with outstanding long life.

- Michelin Port Tires Product Manager

LEARN MORE

ON THE WEB
business.michelin.co.uk

TESTIMONIALS
youtube.com/michelinearthmover

TOOLS

BEYOND ROAD SELECTOR
beyond-road.selector.michelingroup.com/mh

CONTACT

Please contact your local sales representative for more information.

MICHELIN X TERMINAL T



TECHNICAL CHARACTERISTICS

DESCRIPTION	CAI *[MSPN]*	Max.dist./ hour km *[mile]*	Section width mm *[in]*	Outer diameter mm *[in]*	Static load radius mm *[in]*	Rolling circumference mm *[in]*	Tread depth mm *[32rd]*	Dual spacing mm *[in]*	Cap liter *[gal]*	Measuring recommended rim	Other approved rims mm *[in]* *See end of document for more options*
280/75 R22.5 168A8 TL	004371 *33193*	20 *12.4*	279 *11*	995 *39.2*	447 *17.6*	3000 *118.1*	31 *39.1*	326 *12.8*	85 *22.5*	8.25	-

LOAD CAPACITY BASED ON INFLATION PRESSURE AND SPEED

Bar *Psi*	6 *87*	8 *116*	10 *145*
Machine - use kg - *lbs*	TERMINAL TRACTOR		
STATIC	5350 *11797*	6900 *15215*	8450 *18632*
5 km/h *3 mph*	5060 *11157*	6450 *14222*	7840 *17287*
10 km/h *6 mph*	4370 *9636*	5800 *12789*	7280 *16052*
35 km/h *22 mph*	4200 *9261*	5300 *11687*	6300 *13892*
40 km/h *25 mph*	3750 *8269*	4675 *10308*	5600 *12348*

MOUNTING ACCESSORIES AVAILABLE	Recommended rim	Tubeless bead seal [CAI]	Rubber ring [CAI]	Tube [CAI]	Flap [CAI]
	8.25	N/A	N/A	N/A	N/A

310/80 R22.5 175A8 TL	278144 *03379*	20 *12.4*	307 *12.1*	1084 *42.7*	483 *19*	3257 *128.2*	30 *37.8*	355 *14*	116 *30.6*	9.0	-

LOAD CAPACITY BASED ON INFLATION PRESSURE AND SPEED

Bar *Psi*	6 *87*	8 *116*	10 *145*
Machine - use kg - *lbs*	TERMINAL TRACTOR		
STATIC	6890 *15192*	8655 *19084*	10420 *22976*
5 km/h *3 mph*	6160 *13583*	7910 *17442*	9660 *21300*
10 km/h *6 mph*	5930 *13076*	7450 *16427*	8970 *19779*
35 km/h *22 mph*	5080 *11201*	6420 *14156*	7760 *17111*
40 km/h *25 mph*	4450 *9812*	5675 *12513*	6900 *15215*

MOUNTING ACCESSORIES AVAILABLE	Recommended rim	Tubeless bead seal [CAI]	Rubber ring [CAI]	Tube [CAI]	Flap [CAI]
	9.0	N/A	N/A	N/A	N/A

310/80 R22.5 175A8 TL MEC	508353 *03379*	20 *12.4*	307 *12.1*	1084 *42.7*	483 *19*	3257 *128.2*	30 *37.8*	355 *14*	116 *30.6*	9.0	-

LOAD CAPACITY BASED ON INFLATION PRESSURE AND SPEED

Bar *Psi*	6 *87*	8 *116*	10 *145*
Machine - use kg - *lbs*	TERMINAL TRACTOR (INTENSE USAGE)		
STATIC	6890 *15192*	8655 *19084*	10420 *22976*
5 km/h *3 mph*	6160 *13583*	7910 *17442*	9660 *21300*
10 km/h *6 mph*	5930 *13076*	7450 *16427*	8970 *19779*
35 km/h *22 mph*	5080 *11201*	6420 *14156*	7760 *17111*
40 km/h *25 mph*	4450 *9812*	5675 *12513*	6900 *15215*

MOUNTING ACCESSORIES AVAILABLE	Recommended rim	Tubeless bead seal [CAI]	Rubber ring [CAI]	Tube [CAI]	Flap [CAI]
	9.0	N/A	N/A	N/A	N/A

MICHELIN X AGV^{EV}



1 ROBUSTNESS

Optimize machine uptime
New generation of radial tire, developed to ensure maximal reliability on automated machines.

2 TREADLIFE

Improve service life [1]
Smooth pattern designed with specific rubber compound for an optimized tire life.

3 ENERGY EFFICIENCY

Get up to 40% reduction in rolling resistance [2]
Specifically designed radial structure with low resistance overall rubber compounds.

TIRE CHARACTERISTICS



ADDITIONAL INFORMATION

VEHICLE EQUIPMENT



> Energy efficiency and productivity are key points for port operation competitiveness. Advanced automated systems and electrification of ports are answering this demand. This calls for tires capable of smooth and continuous operations with the lowest energy consumption possible and an outstanding wear life. Our new X AGV^{EV} tires fully support these challenges.
>
> *- Michelin Port Tires Product Manager*

[1] Expect to be in operations over 20.000 hours / 4 years under standard operation. Tire tested in real conditions, port of Rotterdam, from 2020 to 2021.
[2] Compared to premium BIAS and Radial tires on AGV market. Rolling resistance measured in Michelin Center, in Ladoux, from 2020 to 2021.

LEARN MORE

ON THE WEB
business.michelin.co.uk

TESTIMONIALS
youtube.com/michelinearthmover

TOOLS

BEYOND ROAD SELECTOR
beyond-road.selector.michelingroup.com/mh

CONTACT

Please contact your local sales representative for more information.

MICHELIN X AGV^EV



TECHNICAL CHARACTERISTICS

DESCRIPTION	CAI [MSPN]	Max.dist./ hour km [mile]	Section width mm [in]	Outer diameter mm [in]	Static load radius mm [in]	Rolling circumference mm [in]	Tread depth mm [32rd]	Dual spacing mm [in]	Cap liter [gal]	Measuring recommended rim	Other approved rims mm [in] See end of document for more options
18.00 R 25 207A5	677019 26910	14 8.7	506 19.9	1656 65.2	750 29	5006 197	40 50	612 24.1	534 141.2	13.00/2.5	15.00/2.5

LOAD CAPACITY BASED ON INFLATION PRESSURE AND SPEED

Bar *Psi*	6 *87*	8 *116*	10 *145*
Machine - use kg - *lbs*	CONTAINER TRANSPORTER PLATFORMS (AGV) - RATED LOAD		
STATIC	18380 *40528*	22280 *49127*	26250 *57881*
10 km/h *6 mph*	15930 *35126*	19180 *42292*	22750 *50164*
25 km/h *15 mph*	12250 *27011*	14750 *32524*	17500 *38588*
Machine - use kg - *lbs*	CONTAINER TRANSPORTER PLATFORM (AGV) - MAX CYCLIC LOAD		
10 km/h *6 mph*	18380 *40528*	22280 *49127*	26250 *57881*
25 km/h *15 mph*	15930 *35126*	19180 *42292*	22750 *50164*

MOUNTING ACCESSORIES AVAILABLE	Recommended rim	Tubeless bead seal [CAI]	Rubber ring [CAI]	Tube [CAI]	Flap [CAI]
	13.00/2.5	N/A	OR 3-25 SULLA [553200]	25 WAM [944085]	16-24/25

21.00 R 25 213A5	043270 24573	14 8.7	559 22	1744 68.7	750 29	5006 197	40 50	742 29.2	686 181.2	15.00/3.0	-

LOAD CAPACITY BASED ON INFLATION PRESSURE AND SPEED

Bar *Psi*	6 *87*	8 *116*	10 *145*
Machine - use kg - *lbs*	CONTAINER TRANSPORTER PLATFORMS (AGV) - RATED LOAD		
STATIC	21000 *46305*	24800 *54684*	30900 *68135*
10 km/h *6 mph*	19000 *41895*	22000 *48510*	26780 *59050*
25 km/h *15 mph*	14000 *30870*	17400 *38367*	20600 *45423*
Machine - use kg - *lbs*	CONTAINER TRANSPORTER PLATFORM (AGV) - MAX CYCLIC LOAD		
10 km/h *6 mph*	19000 *41895*	22000 *48510*	26780 *59050*
25 km/h *15 mph*	19000 *41895*	22000 *48510*	26780 *59050*

MOUNTING ACCESSORIES AVAILABLE	Recommended rim	Tubeless bead seal [CAI]	Rubber ring [CAI]	Tube [CAI]	Flap [CAI]
	15.00/3.0	N/A	OR 3-25 SULLA [553200]	N/A	N/A



SPECIFIC APPLICATIONS

Please note that tires for mechanical handling equipment used in areas where there is a high risk of fire or explosion, such as the chemical and petrochemical industries, must meet certain standards concerning their electrical resistivity. When the electrical resistance measured according to ISO 16292 or WDK 110 standards is lower than 10^6 Ohms, then the tire is called 'dissipative' and its sidewall features the following symbol.



PERFORMANCE

Any and all tire performance claims or comparisons contained herein are for informational purposes only to aid in the selection of a tire and **do not** constitute any form of performance guarantee or warranty. Individual results may vary. Such information may not be used as a basis for any performance guarantee or warranty claim.



MICHELIN TECHNICAL DATA

INDUSTRIAL PNEUMATIC TIRES
RADIAL TECHNOLOGY

TECHNICAL INFORMATION

TIRE CONSTRUCTION
- DIAGONAL OR BIAS TIRES CONSTRUCTION — PAGE 41
- RADIAL TIRES CONSTRUCTION — PAGE 42
- SOLID TIRES CONSTRUCTION — PAGE 43

GENERAL INFORMATION
- DIFFERENT TIRE SERIES — PAGE 44
- DIFFERENT TIRE SIZE DESIGNATIONS — PAGE 44
- TIRE MARKING — PAGE 45
- LOAD INDEX AND SPEED SYMBOL — PAGE 46
- READING GUIDE FOR PRESSURE, LOAD AND USAGE TABLES — PAGE 46

LOAD CAPACITY FUNCTION OF SPEED FOR VARIOUS APPLICATIONS
- CYCLIC SERVICE — PAGE 47

ADVICE AND RECOMMENDATIONS ON THE USE OF MANUFACTURING TIRES
- INSERTS AND SOLID FILLS — PAGE 48
- NITROGEN INFLATION — PAGE 48

OTHER RADIAL TIRES USED FOR MECHANICAL HANDLING
- CONDITION OF USE — PAGE 49

TUBELESS BEAD SEAL
- MICHELIN TUBELESS BEAD SEAL 8" TO 20" RIMS — PAGE 50
- SIZE MARKING — PAGE 51
- APPROVED RIMS — PAGE 52
- APPROVED RIMS FOR MANUFACTURING — PAGE 53
- FLAP + TUBE SOLUTION — PAGE 54
- CORNER SEAL AND O-RING SOLUTION — PAGE 55
- VALVES AND ASSOCIATED ACCESSORIES — PAGE 56
- TRUCK-TYPE VALVE — PAGE 57
- TYPES OF TUBELESS EARTHMOVER VALVES — PAGE 58
- EARTHMOVER TUBELESS VALVE — PAGE 59

APPROXIMATE LOOSE MATERIAL DENSITIES
- UNITS OF MEASURE AND CONVERSION TABLES — PAGE 60

TIRE CONSTRUCTION

DIAGONAL OR BIAS TIRES CONSTRUCTION

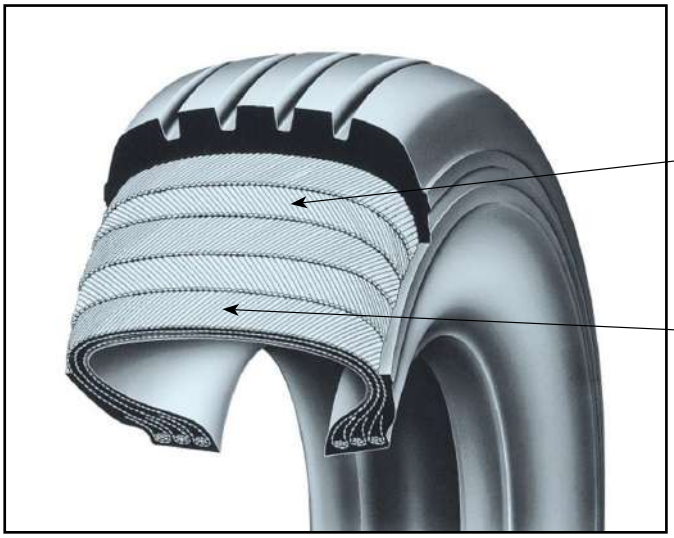

Crown and sidewalls functions are not differentiated

The casing is made of several textile plies positioned in a crisscross manner

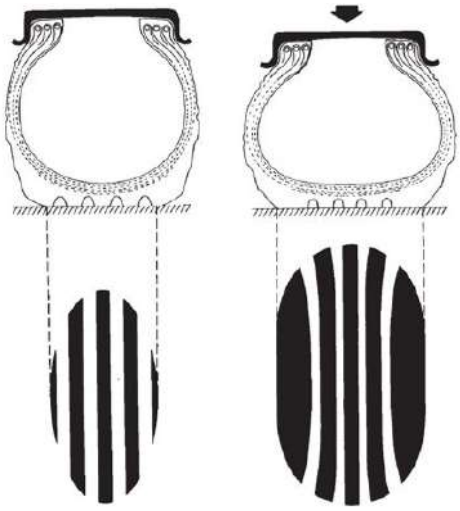

GOOD TO KNOW

Important heat buildup → Reduced productivity (Low transport distance)

Parasite frictions with the ground →

High distortion of the tire footprint → **Low wear performance**

TIRE CONSTRUCTION

RADIAL TIRES CONSTRUCTION



The crown belt is made of several working and protecting steel plies.

The casing is made of steel with a double protection at the sidewall.

CROWN AND SIDEWALLS ARE WORKING SEPARATELY

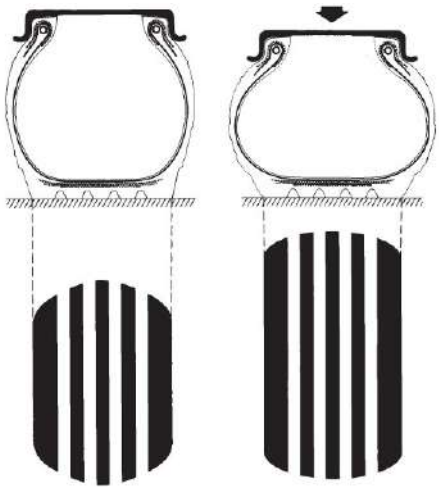

GOOD TO KNOW

Low heat buildup → Extended productivity (Long transport distance)

Even frictions with the ground →

Low distortion of the footprint → **Improved wear performance**

TIRE CONSTRUCTION

SOLID TIRES CONSTRUCTION

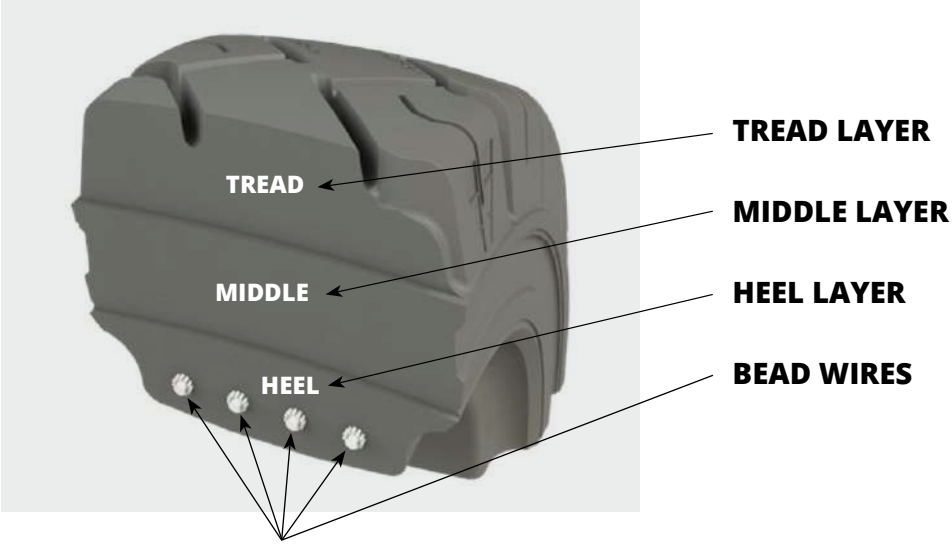

2 DIFFERENT TIRE FITMENTS / MODELS:

STANDARD HEEL
Need all rim component to be fitted.
(Flange, lockring, bead seat band)



QUICK HEEL
The tire profile self locks in the rim hub.
No need of further rim components.

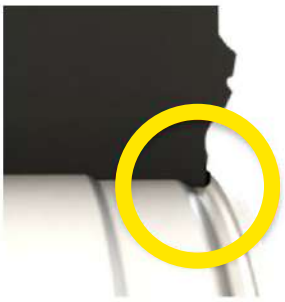

GOOD TO KNOW

High heat buildup	→	Low intensity (Limited transport distance)
Reduced tire footprint	→	Low wear performance (h/mm)
No inflation pressure	→	Maintenance free product

GENERAL INFORMATION

THE DIFFERENT TIRE SERIES

There are different tire series categorized by the aspect ratio **H/S**:
(the ratio in % between the sidewall height and the tire width).
H = standard section height S = standard section width

STANDARD TIRE
(100 SERIES, NARROW BASE)

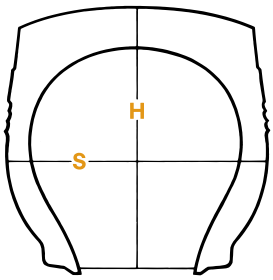

The H/S aspect ratio is approximately equal to 1,00.

$$\frac{H}{S} = \frac{1}{1} = 100\ \%$$

The section width, given in inches, is a whole number
e.g.: 12.00 R 20
or the section width, given in inches, is a whole number followed by a fraction.
e.g.: 8.25 R 15
The aspect ratio is not indicated in the size designation.

LOW-PROFILE TIRES
(65 TO 95 SERIES, 5 BY 5)

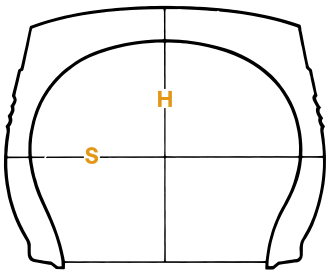

The H/S aspect ratio is less than 1
(0.65 in the followed example).

$$\frac{H}{S} = \frac{0.65}{1} = 65\ \%$$

The nominal section width is expressed as a measurement in millimeters followed by the aspect ratio 65 to 95 (65 in the example).
e.g.: 355/65 R 15

THE DIFFERENT TIRE SIZE DESIGNATIONS

RIM DIAMETER	TIRE TECHNOLOGY / SIZE EQUIVALENT MARKINGS			SIZE DETAILS						
	SOLID	BIAS	RADIAL	OD	SW		ASPECT RATIO	RIM DIAMETER	LI	SI
				(in)	(in)	(mm)	(H/S)	(in)		(ETRTO)
4	4.80 - 4	4.00 - 4			4			4		
8	4.80 - 8	4.00 - 8			4			8		
	5.70 - 8	5.00 - 8	5.00 R 8		5			8	111	AS
	15 x 4.5 - 8	125/75 - 8		15	4.5	125	75	8		
	16 x 6 - 8	150/75 - 8	150/75 R 8	16	6	150	75	8	113	AS
	18 x 7 - 8	180/70 - 8	180/70 R 8	18	7	180	70	8	125	AS
9	6.90 - 9	6.00 - 9 *(6.90 - 9)*	6.00 R 9		6			9	134	AS
	21 x 8 - 9	200/75 - 9	200/75 R 9	21	8	200	75	9	121	AS
10		6.50 - 10	6.50 R 10		6.5			10	128	AS
	23 x 9 - 10	225/75 - 10	225/75 R 10	23	9	225	75	10	142	AS
12		7.00 - 12	7.00 R 12		7			12	136	AS
	23 x 10 - 12	250/60 - 12	250/60 R 12	23	10	250	60	12		
	27 x 10 - 12	250/75 - 12	250/75 R 12	27	10	250	75	12	152	AS
15		7.00 - 15	7.00 R 15		7			15	143	AS
		7.50 - 15	7.50 R 15		7.5			15	146	AS
	28 x 9 - 15	225/75 - 15 *(8.15 - 15)*	225/75 R 15	28	9	225	75	15	149	AS
		8.25 - 15	8.25 R 15		8.25			15	153	AS
		250/70 - 15 *(250 - 15)*	250/70 R 15		10	250	70	15	153	AS
		315/70 - 15 *(300 - 15)*	315/70 R 15		10	315	70	15	165	AS
	28 x 12.5 - 15	355/45 - 15		28	12.5	355	45	15		
	32 x 12.1 - 15		355/65 R 15	32	12.1	355	65	15	175	AS

OD: Outer Diameter **S/SW**: Section Width **H/HS**: Section High **LI**: Load Index **SI**: Speed Index **PR**: Ply Rating

TIRE MARKING



For special conditions usage, please consult us.

MICHELIN®	Manufacturer
15	Nominal section width in inches
25	Tire aspect ratio (H/S = 0,65)
R	Radial construction
STABIL'X	Old name of the family being deleted
XZM	XZM range name
170	Load Index
A5	Speed Symbol: 25 km/h
CYCLIC	Cyclic use (see explanation on following pages)
RADIAL X	Indication of tire structure
	Electrical conductivity tire class 1

FOR MORE DETAILS CONCERNING:

Choice of tire, use of tire, fitting, operation pressure and storage and maintenance, consult USE AND MAINTENANCE GUIDE FOR MICHELIN EARTHMOVER TIRES.



LOAD INDEX AND SPEED SYMBOL

Industrial and handling tires bear a Load Index and a Speed Symbol. The **LOAD INDEX** is a numerical code from international standard tires, which indicates the reference load capacity.

LOAD INDEX	LOAD IN KG	LOAD INDEX	LOAD IN KG	LOAD INDEX	LOAD IN KG	LOAD INDEX	LOAD IN KG	LOAD INDEX	LOAD IN KG	LOAD INDEX	LOAD IN KG
100	800	120	1400	140	2500	160	4500	180	8000	200	14000
101	825	121	1450	141	2575	161	4625	181	8250	201	14500
102	850	122	1500	142	2650	162	4750	182	8500	202	15000
103	875	123	1550	143	2725	163	4875	183	8750	203	15500
104	900	124	1600	144	2800	164	5000	184	9000	204	16000
105	925	125	1650	145	2900	165	5150	185	9250	205	16500
106	950	126	1700	146	3000	166	5300	186	9500	206	17000
107	975	127	1750	147	3075	167	5450	187	9750	207	17500
108	1000	128	1800	148	3150	168	5600	188	10000	208	18000
109	1030	129	1850	149	3250	169	5800	189	10300	209	18500
110	1060	130	1900	150	3350	170	6000	190	10600	210	19000
111	1090	131	1950	151	3450	171	6150	191	10900	211	19500
112	1120	132	2000	152	3550	172	6300	192	11200	212	20000
113	1150	133	2060	153	3650	173	6500	193	11500	213	20600
114	1180	134	2120	154	3750	174	6700	194	11800	214	21200
115	1215	135	2180	155	3875	175	6900	195	12150	215	21800
116	1250	136	2240	156	4000	176	7100	196	12500	216	22400
117	1285	137	2300	157	4125	177	7300	197	12850	217	23000
118	1320	138	2360	158	4250	178	7500	198	13200	218	23600
119	1360	139	2430	159	4375	179	7750	199	13600	219	24300

The reference load corresponds to the load index of the designation.

The **SPEED SYMBOL** is a numerical code from international standard tires, which indicates the maximum speed at which the tire can carry a load corresponding to its load index, under specified conditions.

SPEED SYMBOL	A1	A2	A3	A4	A5	A6	A7	A8	B	C	D	E	F	G	J	K	L
Speed (km/h)	5	10	15	20	25	30	35	40	50	60	65	70	80	90	100	110	120

READING GUIDE FOR PRESSURE, LOAD AND USAGE TABLES

The shaded box of load/pressure tables is the value defined by the industry standards.

Up to this limit, the tire works in an optimal zone leading to a better balance of performance.

The use of MICHELIN® tires outside the specification of load/pressure/use tables must be validated by your Michelin Representative.

The MICHELIN® Radial tires used in Mechanical Handling and presented in this document are designed for a cyclic service. This is defined as **mechanical handling, cyclic service**.

LOAD CAPACITY FUNCTION OF SPEED

FOR VARIOUS APPLICATIONS*

CYCLIC SERVICE

CYCLIC SERVICE covers usages where tires are not used continuously at their rated speed and load. Vehicle usually operate one way loaded and one way empty (e.g. Forklifts, Terminal Tractors, Straddle Carriers, ...).

All axles of the vehicle may not be submitted to the same load, and this is the reason why an extra 30% load capacity can be authorized on the front axles (load wheels) of counter balanced forklift trucks when the rear axles (steering wheels) holding the counterweight permanently will be limited to the 105% its rated load only.

The following graphic describes those of the main usage in material handling.

Counter Balanced Forklift truck prevail for all counter-balanced vehicle (e.g. Empty Container Handler, Top Lift Full Container Handler, Reach Stacker, ...)

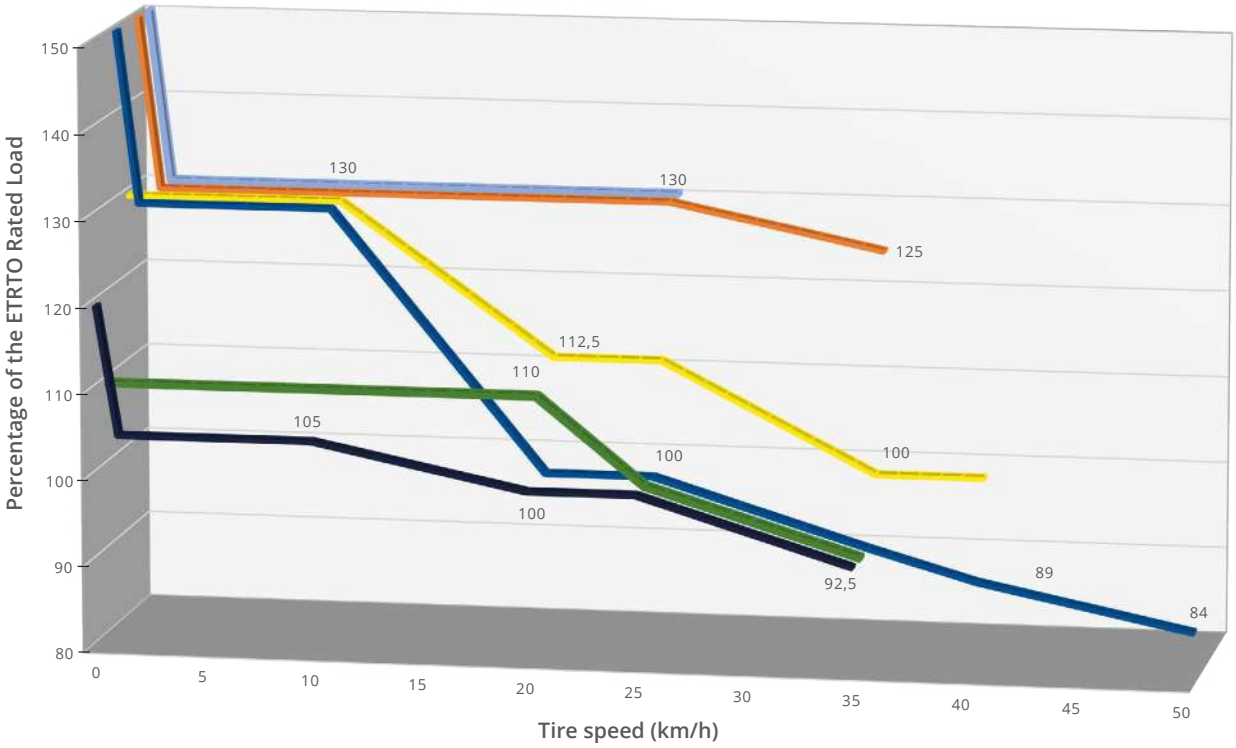



Load wheels
Steer wheels
Counter balanced forklift truck



Straddle carrier



Terminal tractor and trailer



AGV



Towbarless aircraft tractor load wheels
Slag pot carrier load wheels

In case where the maximal load, speed, distance in an hour may be exceeded with specific machine/usages, please contact your Michelin representative to apply for a specific usage authorization request.

* ETRTO 2023 reference

ADVICE AND RECOMMENDATIONS

ON THE USE OF INDUSTRIAL TIRES

NITROGEN INFLATION

INTRODUCTION

Under most circumstances, the air inflation is suitable for our tires and allows them to work in the best conditions.

WHEN SHOULD NITROGEN INFLATION BE RECOMMENDED ?

Nitrogen, an inert and stable gas with a larger molecule, diffuses more slowly than oxygen through rubber, limiting the risk of oxidation of different parts of the tire (rubber, cables, etc.). It also slows the loss of inflation pressure.

Nitrogen inflation is recommended when working under the following conditions:

- Areas where there is a risk of explosion
- Working with or in areas involving high-temperature liquids (e.g., foundries, glass works, etc.)
- Working in areas where there is a risk of electrical discharge (close to high tension cables, etc.)
- Working where overheating of a tire has been caused by:
  - Intensive driving (speed, distance, intensity of the cycles)
  - Excessive overheating of a mechanical unit (transmission or brakes for example

Nitrogen inflation is a well-adapted solution for use with mechanical handling equipment.

EQUIPMENT NECESSARY

To install an effective inflation system, Michelin recommends:

- 2 gas bottles of compressed nitrogen
- 1 nitrogen regulator
- An inflation tool in compliance with local regulations.

⚠ CAUTION:

Nitrogen inflation equipment should only be used by properly trained individuals. A properly functioning regulator must always be used and all manufacturer's instructions followed. Failure to do so can lead to personal injury.

SUPPLIERS: Contact your local specialist in compressed gases.

VOLUME OF NITROGEN NECESSARY TO INFLATE A TIRE

The quantity of nitrogen necessary to inflate a tire is proportional to its internal volume and the inflation pressure required.

The volumes of the industrial tires are shown in the following tables (characteristics of MICHELIN® Industrial Tires).

Example: 250 / 70 R 15 XZM TL
Interior volume is 39 liters.
For a pressure of 10 bars, the quantity of nitrogen needed is: 39 x 10 = 390 liters.

OTHER RADIAL TIRES

USED FOR MECHANICAL HANDLING

INSERTS AND SOLID FILLS

Inserts and solid fills are sometimes used in lieu of air or nitrogen. This technique is adapted for specific uses.

Some performance is reduced (lower operating speed) and the comfort of the driver of the machine downgraded significantly.

Their implementation requires qualified personnel.

The preceding information is extracted from the USE AND MAINTENANCE GUIDE FOR MICHELIN® EARTHMOVER TIRES.

For more details, consult our website
pro.michelin.com
OR YOUR MICHELIN REPRESENTATIVE.

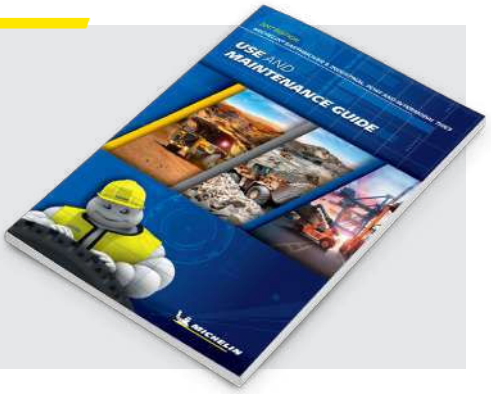

CONDITION OF USE

The range of MICHELIN® industrial tires has been specifically designed to equip industrial machines.
The sizes are specific to these machines and their work; the loads and speeds correspond to standardized figures.

Each time tires need to be fitted to mechanical handling equipment, the following rules should be followed:
1°) When the tire size exists in the industrial tire range, the industrial tire must be used.
2°) When size does not exist in the industrial tire range, it may be necessary to consult other tire ranges (Agriculture, Truck or Earthmover), whose characteristics are compatible.

In all cases, contact your Michelin Representative who will be able to guide you on the best solution.
Technical validation will be provided by Michelin Representative for these uses.

TUBELESS BEAD SEAL

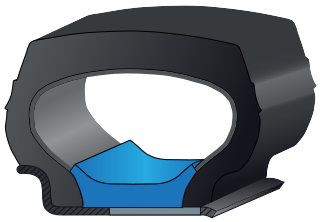

MICHELIN TUBELESS BEAD SEAL 8" TO 20" RIMS

RIM & TIRE SIZES					TBS (TUBELESS BEAD SEAL)			
RIM DIAM. (INCH)	RIM WIDTH (INCH)	TIRE SIZE	RANGE	TIRE CAI	DESCRIPTION	VALVE TYPE	PLASTIC PLUG	TBS SET CAI
8	3 1/4 I	5.00 R 8	XZM	110208	80 TL 8	R 2160	-	102150
	3.00 D	5.00 R 8	XZM	110208	80 TL 8	R 2160	-	102150
	4.33 R	150/75 R 8	XZM	110087	110 TL 8	R 2102	-	613972
	4.33 R	180/80R8	XZM	110069	110 TL 8	R 2102	-	613972
9	4.00 E	6.00R9	XZM, XZR	110204	100 TL 9	R 2160	-	102151
	6.00 E	200/75R9	XZM	110090	150 TL 9	R 2102	R 2110	102182
10	5.00 F	6.50R10	XZM, XZR	110213	125 TL 10	R 2102	-	102183
	6.50 F	225/75R10	XZM	110089	165 TL 10	R 2102	R 2110	102184
12	5.00 S	7.00R12	XZM, XZR	110195	125 TL 12	R 2161	-	522788
	8.00 G	250/60R12	XZM	358151	200 TL 12	R 2102	R 2110	787198
	8.00 G	250/75R12	XZM	110108	200 TL 12	R 2102	R 2110	787198
15	5.5	7.00R15	XZM	110211	140 TL 15	R 2102	-	454346
	6.0	7.00R15	XZM	110211	150 TL 15	R 2102	R 2110	702507
	6.0	7.50R15	XZM	110214	150 TL 15	R 2102	R 2110	702507
	6.5	7.50R15	XZM	110214	165 TL 15	R 2102	R 2110	575769
	6.5	8.25R15	XZM	110218	165 TL 15	R 2102	R 2110	575769
	7.0	8.25R15	XZM	110218	175 TL 15	R 2102	R 2110	260511
	7.0	225/75R15	XZM	110079	175 TL 15	R 2102	R 2110	260511
	7.0	250/70R15	XZM	110075	175 TL 15	R 2102	R 2110	260511
	7.5	250/70R15	XZM	110075	190 TL 15	R 2102	R 2110	464164
	8.0	315/70R15	XZM	110109	200 TL 15	R 2102	R 2110	609679
	9.75	355/65R15	XZM	003789	250 TL 15	R 2102	R 2110	26320
20	7.0	9.00R20	XZM	110185	175 TL 20	R 2102	R 2110	102087
	7.5	9.00R20	XZM	110185	190 TL 20	R 2102	R 2110	102083
	7.0	10.00R20	XZM	110014	175 TL 20	R 2102	R 2110	102087
	7.5	10.00R20	XZM	110014	190 TL 20	R 2102	R 2110	102083
	8.0	10.00R20	XZM	110014	200 TL 20	R 2102	R 2110	102085
	7.5	11.00R20	XZM	110189	190 TL 20	R 2102	R 2110	102083
	8.0	11.00R20	XZM	110189	200 TL 20	R 2102	R 2110	102085
	8.5	11.00R20	XZM	110189	215 TL 20	R 2102	R 2110	102086
	8.0	12.00R20	XZM	110082	200 TL 20	R 2102	R 2110	102085
	8.5	12.00R20	XZM	110082	215 TL 20	R 2102	R 2110	102086

TUBELESS BEAD SEAL DEFINITION

The TBS is a special device allowing the fitment of tubeless tires as tubeless on tube-type rims.
It consists of a ring of special rubber, which is placed inside the tire and fits between the tire beads.
It ensures the airtightness of the wheel and tire assembly.
Valves and plug can be ordered separately, if required.
RANGE (for fitment with XZM TL up to and including 20")

TUBELESS BEAD SEAL - SIZE MARKING

EXAMPLE OF MARKING:

110 TL 8 (for 4.33R - 8 rim)

110 → Width of TBS in mm

TL → Tubeless

8 → Rim diameter in inch

The choice of TBS depends on the width of the rim on which the tire is to be fitted. The allowed rim width(s) are indicated on each TBS.



3 different valves exist for TBS when only R2160 and R2102 are provided as standard with the TBS.

TBS wider than 145 mm offer two positions for the valve to accommodate the rim configuration; for those TBS, a specific plug (R2110) is provided to close the unused valve hole.

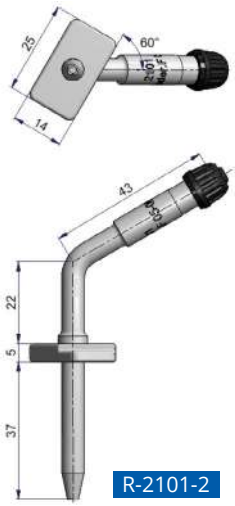

R-2101-2

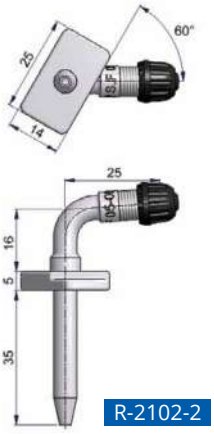

R-2102-2

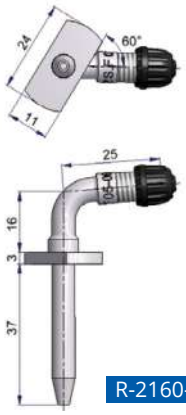

R-2160-2



R-2110 Plastic obturator

CROSS SECTION OF A FITTED TBS

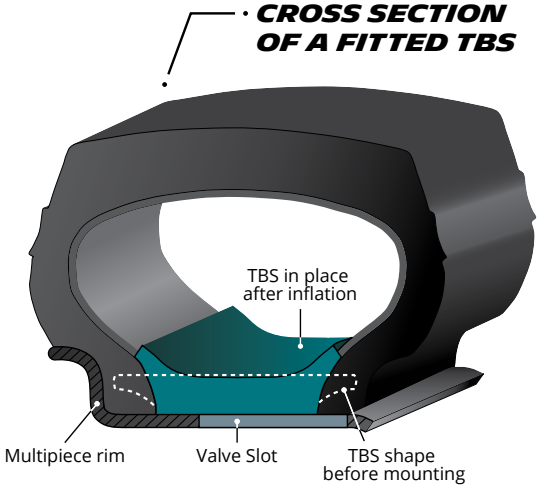

TUBETYPE SYSTEM

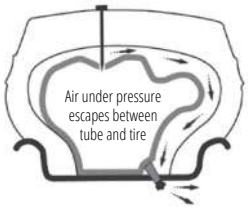

- Rapid deflations
- Risk for load or equipment damages
- Instant production stops

TUBELESS BEAD SEAL™

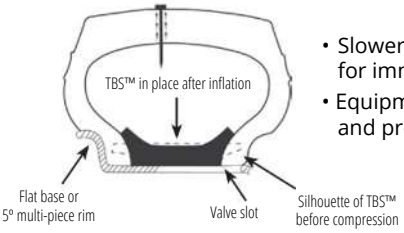

- Slower air loss delays need for immediate attention
- Equipment is still mobile and productive

APPROVED RIMS

RIM TYPES	RIM DESIGN.	F MM INCHES	H (13) MM INCHES	D (13B) MM		RIM R/A(**)	TIRE SIZES	SEAL	TL	TT
FLAT-BASE RIMS 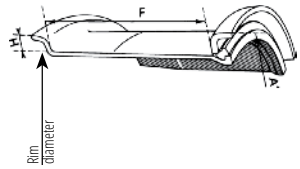	8 - **4.33 R**	110 4.3	28,5 **1.1**	209,2	202,4	R	**180/70 R 8**	None		
	15 - **6.00 S**	152,4 6.0	33,3 **1.3**	387,0	381,0	R	**7.50 R 15**			
	20 - **7.33 V**	186 7.3	44 **1.7**	511,2	508,0	A	9.00 R 20 XZM	**R 1443** Tyran (A 20)	2	2
						A	10.00 R 20 XZM		2	2
						A	11.00 R 20 XZM		2	2
	20 - **8.00 V**	203 8.0	44 **1.7**			A	10.00 R 20 XZM		2	2
						A	11.00 R 20 XZM		2	2
	20 - **8.50 V**	216 8.5	44 **1.7**			A	11.00 R 20 XZM		2	2
						A	12.00 R 20 XZM		2	2
	20 - **9.00 V**	228,5 9.0	44 **1.7**			A	12.00 R 20 XZM		2	2
	24 - **8.50 V**	216 8.5	44 **1.7**	612,8	609,6	A	12.00 R 24 XZM	G25	2	2
	24 - **9.00 V**	228,5 9.0	44 **1.7**			A	12.00 R 24 XZM	G25	2	2
	24 - **10.00 W**	254 10.0	51 **2.0**			A	14.00 R 24 XZM			
5° TAPER BEAD 2-SEAT RIMS 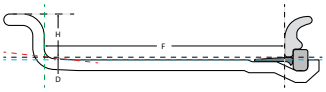 (removable bead seat, split)	20 - **B 6.5**	165 6.5	38 **1.5**	512,8	512,8	A	9.00 R 20 XZM	**R 1443** Tyran (A 20)	NA	2
	20 - B 7.0	178 7.0	38 **1.5**			A	9.00 R 20 XZM		NA	2
						A	10.00 R 20 XZM		NA	2
	20 - B 7.5	190,5 7.5	43 **1.7**			A	9.00 R 20 XZM		NA	2
						A	10.00 R 20 XZM		NA	2
						A	11.00 R 20 XZM		NA	2
	20 - B 8.0	203 8.0	43 **1.7**			A	10.00 R 20 XZM		NA	2
						A	11.00 R 20 XZM		NA	2
	20 - B 8.5	216 8.5	45,5 **1.8**			A	11.00 R 20 XZM		NA	2
						A	12.00 R 20			
	24 - B 8.5	216 8.5	45,5 **1.8**			A	12.00 R 24			
5° TAPER BEAD 2-SEAT RIMS *(ADVANCED RIM)* 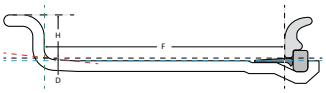 (removable bead seat, split)	8 - **3.00 D**	76 3.0	18 **0.7**	202,4		A	5.00 R 8	None		
	8 - 3 **1/4 I** (divided rim)	82,5 3.2	16 **0.6**			R	**5.00 R 8**			
	8 - **5.00 F**	127 5.0	22,5 **0.9**	202,4		R	180/70 R 8			
	9 - **4.00 E**	101,5 4.0	20 **0.8**	227,8		R	**6.00 R 9**			
	10 - **5.00 F**	127 5.0	22,5 **0.9**	253,2		R	**6.50 R 10**			
	10 - **5.50 F**	140 5.5	22,5 **0.9**			A	6.50 R 10			
	10 - **6.50 F**	165 6.5	22,5 **0.9**			R	**225/75 R 10**			
	12 - **5.00 S** (and divided rim)	127 5.0	31,5 **1.2**	308,8		R	**7.00 R 12**			
	12 - **8.00 G**	203 8.0	28 **1.1**	304,0		R	**250/75 R 12**			
	15 - **5.5**	139,5 5.5	30,5 **1.2**	387,4	387,0	R	**7.00 R 15**			
	15 - **6.0**	152,5 6.0	33 **1.3**			A	7.00 R 15			
						R	**7.50 R 15**			
	15 - **6.5**	165 6.5	35,5 **1,4**			A	7.50 R 15			
						R	**8.25 R 15**			
	15 - **7.0**	178 7.0	38 **1.5**	387,4	387,0	R	**225/75 R 15**	None		
						A	8.25 R 15			
						A	250/70 R 15			
	15 - **7.5**	190,5 7.5	40,5 **1.6**			R	**250/70 R 15**			
	15 - **8.0**	203 8,0	43 **1.7**			R	**315/70 R 15**			
	15 - **9.75**	247,5 9.7	38 **1.5**			R	**355/65 R 15**			

** R = Recommended - A = Allowed

*See page 57 for footnotes.

APPROVED RIMS FOR MANUFACTURING

RIM TYPES	RIM DESIGN.	F MM INCHES	H (13) MM INCHES	D (13B) MM		RIM R/A(**)	TIRE SIZES	SEAL	TL	TT
5º TAPER BEAD 2-SEAT RIMS *(ADVANCED RIM)* 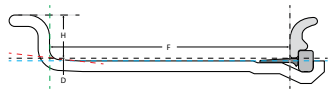 (removable bead seat, split)	20 - **6.5**	165 6.5	35,5 **1.4**	514,4	514,0	A	9.00 R 20 XZM	None	NA	0
	20 - **7.0**	178 7.0	38 **1.5**			R	**9.00 R 20 XZM**	None	NA	0
						A	10.00 R 20 XZM	None	NA	0
	20 - **7.0 T**	177,8 7.0	38,1 **1.5**			R R	9.00 R 20 XZM 10.00 R20 XZM	None	NA	0
	20 - **7.5**	190,5 7.5	40,5 **1.6**			A	9.00 R 20	None	NA	0
						R	**10.00 R 20**	None	NA	0
						A	11.00 R 20	None	NA	0
	20 - **8.0**	203 8.0	43 **1.7**			A	10.00 R 20	None	NA	0
						R	**11.00 R 20**	None	NA	0
						A	12.00 R 20	None	NA	0
	20 - **8.0 V**	203 8.00	27,5 **1.1**			R	10.00 R 20 XZM	None	NA	2
						R	11.00 R 20	None		
	20 - **8.5**	216 8.5	45,5 **1.8**			A	11.00 R 20 XZM	None	NA	0
						R	**12.00 R 20 XZM**			
	20 - **8.5 V**	216 8.5	44,4 **1.7**			R	11.00 R 20	None		
						R	12.00 R 20			
	20 - **9.0**	228,5 9.0	48,5 **1.9**			A	12.00 R 20 XZM	None	NA	0
	24 - **8.5**	216 8.5	45,5 **1.8**	616,0	615,5	A	12.00 R 24XZM	G25	NA	2
	24 - **9.0**	228,5 9.0	48,5 **1.9**			A	12.00 R 24 XZM	G25	NA	2
	24 - **10.0**	254 10.0	50,8 **2.0**			R	**14.00 R 24 XZM**	None	NA	0
5º TAPER BEAD-SEAT RIMS *(3 PIECES)* 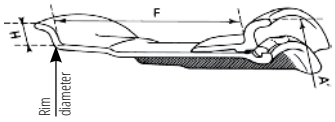 (*) New wheels have additional marking "IF." The IF flanges feature an Integrated Flange, suited for Radial tires. The width of the flange is larger.	24 - **10.00 WA**	254 10.0	51 **2.0**	614,4		R	**14.00 R 24 XZM**	**Sulla** (OR 3-25)	1	0
	25 - **11.25/2.0 IF(*)**	284 11,2	51 **2,0**	635,0		R	**16.00 R 25**	**Sulla** (OR 3-25)		
	25 - **13.00/2.5 IF(*)**	330 13.0	63,5 **2,5**			R	**18.00 R 25**			
TAPER BEAD-SEAT RIMS *(3 PIECES)* 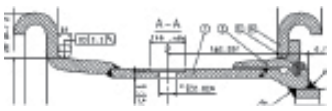	24 - **10.00 WA**	254 10.0	51 **2.0**	614,4			**14.00 R 24 XZM**	**Sulla** (OR 3-25)		
5º TAPER BEAD-SEAT RIMS *(5 PIECES)* 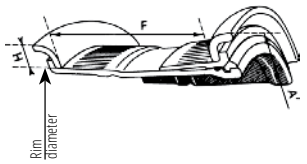	25 - **11.25/2.0IN**	284 11.2	51 **2.0**	635,0		R	**16.00 R 25**	**Sulla** (OR 3-25)		
	25 - **13.00/2.0IN**	330 13.0	51 **2.0**			A	16.00 R 25			
	25 - **13.00/2.5IN**	330 13.0	63,5 **2.5**			R R	**18.00 R 25** **480/95 R 25**			
	25 - **15.00/2.5IN**	381 15.0	63,5 **2.5**			A	18.00 R 25			
	33 - **13.00/2.5IN**	330 13.0	63,5 **2.5**	838,2		R	**18.00 R 33**	**Strix** (OR 3-33)		
15º TAPER DROP-CENTER RIMS 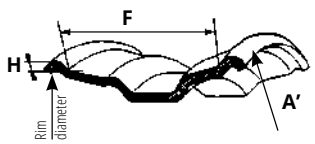	22.5 x 8.25	209,5 8.25	12.7 **0.5**	571,5		A R	280/75 R 22.5 XTT 310/80 R 22.5 XTT (except AIM Zone)	None		
	22.5 x 9.00	228.6 9.00	12.7 **0.5**			R	310/80 R 22.5			

** R = Recommended - A = Allowed

See page <?> for footnotes.

FLAP + TUBE SOLUTION



RIM & TIRE SIZE			FLAPS		TUBES			
RIM DIAM. (INCH)	RIM WIDTH (INCH)	TIRE SIZE	CAI	DESCRIPTION	CAI	DESCRIPTION	VALVE TYPE Michelin	VALVE TYPE ETRTO
	3 1/4 I	5.00 R 8	894130	90 - 8	566382	8CG	570	V3-02-2
	3.00 D	5.00 R 8	894130	90 - 8	566382	8CG	570	V3-02-2
8	3.50 D	5.00 R 8	894130	90 - 8	566382	8CG	570	V3-02-2
	4.33 R	150/75 R 8	894130	90 - 8	566382	8CG	570	V3-02-2
	4.33 R	180/80R8	894130	90 - 8	964067	8D	570	V3-02-2
9	**4.00 E**	6.00R9	242079	125 - 9	368957	9F	570	V3-02-2
	6.00 E	200/75R9	698290	180 - 9	368957	9F	570	V3-02-2
	5.00 F	6.50R10	001969	140 - 10	007946	10F	1012	V3-02-23
10	5.50 F	6.50R10	001969	140 - 10	007946	10F	1012	V3-02-23
	6.50 F	225/75R10	001969	140 - 10	007946	10F	1012	V3-02-23
	5.00 S	7.00R12	190171	135 - 12	625614	12H	578	V3-04-1
12	**8.00 G**	250/60R12	030440	210 - 12	625614	12H	578	V3-04-1
	8.00 G	250/75R12	030440	210 - 12	188148	12KD	578	V3-04-1
	5,5	7.00R15	670236	180 - 15	812339	7.00 - 15 / 7.50 - 15	570	V3-02-2
	6,0	7.00R15	670236	180 - 15	812339	7.00 - 15 / 7.50 - 15	570	V3-02-2
	6,0	7.50R15	670236	180 - 15	812339	7.00 - 15 / 7.50 - 15	570	V3-02-2
	6,5	7.50R15	670236	180 - 15	812339	7.00 - 15 / 7.50 - 15	570	V3-02-2
	6,5	8.25R15	670236	180 - 15	694949	8.25 - 15	1188	V3-02-7
	6,5	8.25R15	670236	180 - 15	298844	8.25 - 15	1221	V3-05-1
15	**7,0**	225/75R15	230862	180 - 15 HD	812339	7.00 - 15 / 7.50 - 15	570	V3-02-2
	7,0	250/70R15	230862	180 - 15 HD	812339	7.00 - 15 / 7.50 - 15	570	V3-02-2
	7,0	8.25R15	670236	180 - 15	694949	8.25 - 15	1188	V3-02-7
	7,0	8.25R15	670236	180 - 15	298844	8.25 - 15	1221	V3-05-1
	7,5	250/70R15	230862	180 - 15 HD	812339	7.00 - 15 / 7.50 - 15	570	V3-02-2
	8,0	315/70R15	751612	260 - 15	694949	8.25 - 15	1188	V3-02-7
	9,75	355/65R15	See TBS					
	6,5	9.00R20	907771	185 - 20	437622	8.25 - 20	1158	V3-02-14
	7,0	10.00R20	907771	185 - 20	052341	9.00 - 20	1158	V3-02-14
	7,0	9.00R20	907771	185 - 20	437622	8.25 - 20	1158	V3-02-14
	7,5	10.00R20	299014	200 - 20	052341	9.00 - 20	1158	V3-02-14
	7,5	11.00R20	299014	200 - 20	300462	10.00 - 20	1158	V3-02-14
	7,5	9.00R20	299014	200 - 20	437622	8.25 - 20	1158	V3-02-14
	8,0	10.00R20	299014	200 - 20	052341	9.00 - 20	1158	V3-02-14
	8,0	11.00R20	299014	200 - 20	300462	10.00 - 20	1158	V3-02-14
	8,0	12.00R20	299014	200 - 20	179572	11.00 - 20 / 12.00 - 20	1158	V3-02-14
	8,0	12.00R20	299014	200 - 20	024382	11.00 - 20 / 12.00 - 20	1188	V3-02-7
20	8,0	12.00R20	299014	200 - 20	678384	11.00 - 20 / 12.00 - 20	1021	V3-02-10
	8,5	11.00R20	299014	200 - 20	300462	10.00 - 20	1158	V3-02-14
	8,5	12.00R20	299014	200 - 20	179572	11.00 - 20 / 12.00 - 20	1158	V3-02-14
	8,5	12.00R20	299014	200 - 20	024382	11.00 - 20 / 12.00 - 20	1188	V3-02-7
	8,5	12.00R20	299014	200 - 20	678384	11.00 - 20 / 12.00 - 20	1021	V3-02-10
	7.33 V	10.00R20	299014	200 - 20	052341	9.00 - 20	1158	V3-02-14
	7.33 V	11.00R20	299014	200 - 20	300462	10.00 - 20	1158	V3-02-14
	7.33 V	9.00R20	299014	200 - 20	437622	8.25 - 20	1158	V3-02-14
	9.00	12.00R20	299014	200 - 20	179572	11.00 - 20 / 12.00 - 20	1158	V3-02-14
	9.00	12.00R20	299014	200 - 20	024382	11.00 - 20 / 12.00 - 20	1188	V3-02-7
	9.00	12.00R20	299014	200 - 20	678384	11.00 - 20 / 12.00 - 20	1021	V3-02-10
	8,5	12.00R24	025752	250 - 24	862045	12.00 - 24	582	V3-06-5
24	9,0	12.00R24	025752	250 - 24	862045	12.00 - 24	582	V3-06-5
	10,0	14.00R24	025752	250 - 24	734626	14.00 - 24	752	V3-02-17
	11.25/2.0	16.00R25						
	11.25/2.0	450/95R25						
	13.00/2.0	16.00R25						
25	13.00/2.0	450/95R25						
	13.00/2.5	18.00R25			944085	25W AM	1837	V5-04-1
	13.00/2.5	480/95R25			944085	25W AM	1837	V5-04-1
	15.00/2.5	18.00R25			944085	25W AM	1837	V5-04-1
33	13.00/2.5	18.00R33						

CORNER SEAL AND O-RING SOLUTION



CORNER SEAL SOLUTION FOR SMALL INDUSTRY ON 20" RIMS



RIM Ø (INCHES)	RIM WIDTH (INCHES)	TIRE SIZE	DESCRIPTION	MICHELIN REF.	CAI	PACKAGING
20	**7.33V - 8.00V** **8.50V - 9.00V** **B6.5 -** B7.0 7.0T - B7.5 B8.0 - 8.0V B8.5 - 8.5V	9.00 R 20 10.00 R 20 11.00 R 20 12.00 R 20	A 20 TYRAN	R 1443	553004	30

O-RINGS SOLUTION



RIM Ø (INCHES)	Ø WIDTH RIM RECOMMENDED (INCHES)	TIRE SIZE	DESCRIPTION	MICHELIN REF.	CAI	PACKAGING
24	10.00W 10.00WA **10.0**	14.00 R 24	OR 3-25 SULLA	R1437	553200	20
25	**11.25/2.0** 13.00/2.0	16.00 R 25				
	11.25/2.0 13.00/2.0	450/95 R 25				
	11.25/2.0 **13.00/2.5**	480/95 R 25				
	13.00/2.5 **15.00/2.5**	18.00 R 25				

NAME	DESIGNATION	REFERENCE	C.A.I.	TYPE	REMARKS
Tyran	A 20	R 1443	553 004	Corner seal	for 20" tires
Heupo	OR 2 - 25	R 1438	553 201	O-ring	for 25" rim (3 pieces not IF) or for 24" rim 10.00VA
Sulla	OR 3 - 25	R 1437	553 200	O-ring	for 25" rim (3 pieces IF or 5 pieces) or for 24" 10.00WA
Strix	OR 3 - 33	R 1440	553 203	O-ring	for 33" rim

SEAL DESCRIPTION

· O-RING

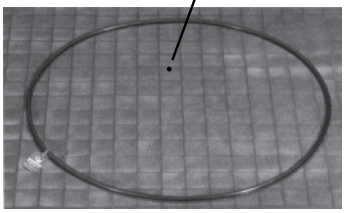

Explanation of the sealing ring designation

The first number is the section diameter of the seal:

- Or: Abbreviation of o-ring
- Imperial number: value expressed in 1/8 of inch (3 = 3/8)
- Decimal number: value expressed in mm (6.6 = 6,6 mm)

The second number is the nominal bead seat diameter, expressed in inches.

· CORNER SEAL

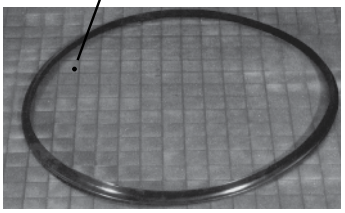

Explanation of the corner seal designation

The letter indicates the profile of the seal.

The number is the nominal rim diameter, in inches.

Note:

Approval for use of corner seals MUST BE obtained from Michelin.

IN ALL CASES, THE VALVE CAP IS ESSENTIAL BECAUSE IT HELPS MAINTAIN THE CLEANLINESS OF THE MECHANISM AND ENSURE AIR TIGHTNESS OF THE VALVE.

CAR TUBE-TYPE STRAIGHT VALVE

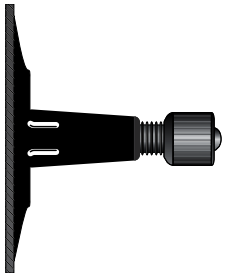

VALVE MARKINGS

The valve is circular and is marked in accordance with ETRTO standards, starting at the top of the valve, and in the following order:
- NAME (or trademark) of the valve manufacturer and his reference number
- ETRTO reference number

FITTING A UNIVERSAL VALVE ON A MICHELIN® TUBE WITH A VALVE BASE

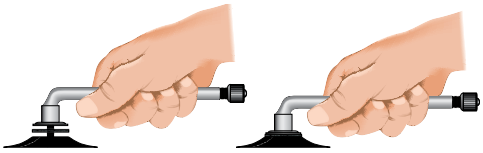

1 - Position the sealing ring on the valve.
The sealing ring must be clean and dry.
2 - Hand tighten the valve until it just touches the sealing ring.
3 - Tighten the valve for a further two turns.
4 - To orientate the valve in the desired position, tighten further.

IMPORTANT: never unscrew the valve to the desired position.

SMALL TRUCK UNIVERSAL STRAIGHT VALVE

Fitted to MICHELIN® tubes for the occasional equipment Tube-Type on 5° and 15° non-U-taper, drop center rim.

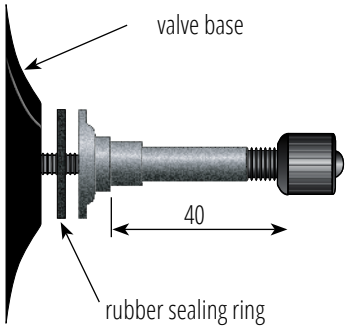

TRUCK-TYPE VALVE

TRUCK–TYPE, UNIVERSAL SINGLE-BEND VALVE

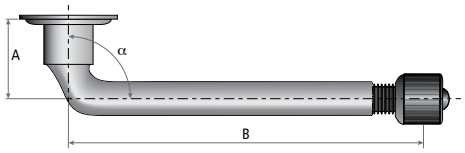

Michelin code	ETRTO Designation	A		B		α°
		mm	inches	mm	inches	
570	V3-02-2	22,5	0.89	43	1.69	120
576	V3-02-3	33	1.30	44,5	1.75	95
752	V3-02-17	20,5	0.81	156,5	6.16	90
1012	V3-02-23	30	1.18	65	2.56	90
1021	V3-02-10	20,5	0.81	115	4.53	94
1156	V3-02-9	20,5	0.81	99,5	3.92	94
1157	V3-02-12	20,5	0.81	132	5.20	94
1158	V3-02-14	20,5	0.81	138,5	5.45	94

TRUCK–TYPE, UNIVERSAL DOUBLE-BEND VALVE

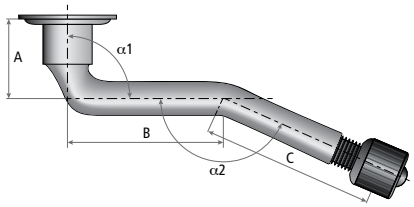

Michelin code	ETRTO Designation	α1°	α2°
578	V3-04-1	90	140

A		B		C	
mm	inches	mm	inches	mm	inches
20.5	0.81	32	1.26	37	1.46

TRUCK–TYPE, UNIVERSAL TRIPLE-BEND VALVE

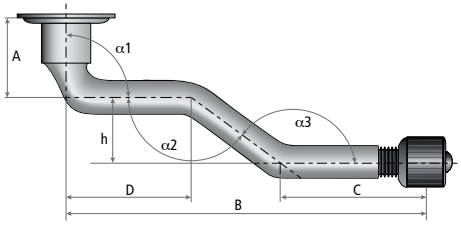

Michelin code	ETRTO Designation	α1°	α2°	α3°
582	V3-06-5	90	139	139

A		B		C		D	
mm	inches	mm	inches	mm	inches	mm	inches
20,5	0.81	131	5.16	49	1.93	62,5	2.46

TYPES OF TUBELESS EARTHMOVER VALVES

TYPE A1 VALVE

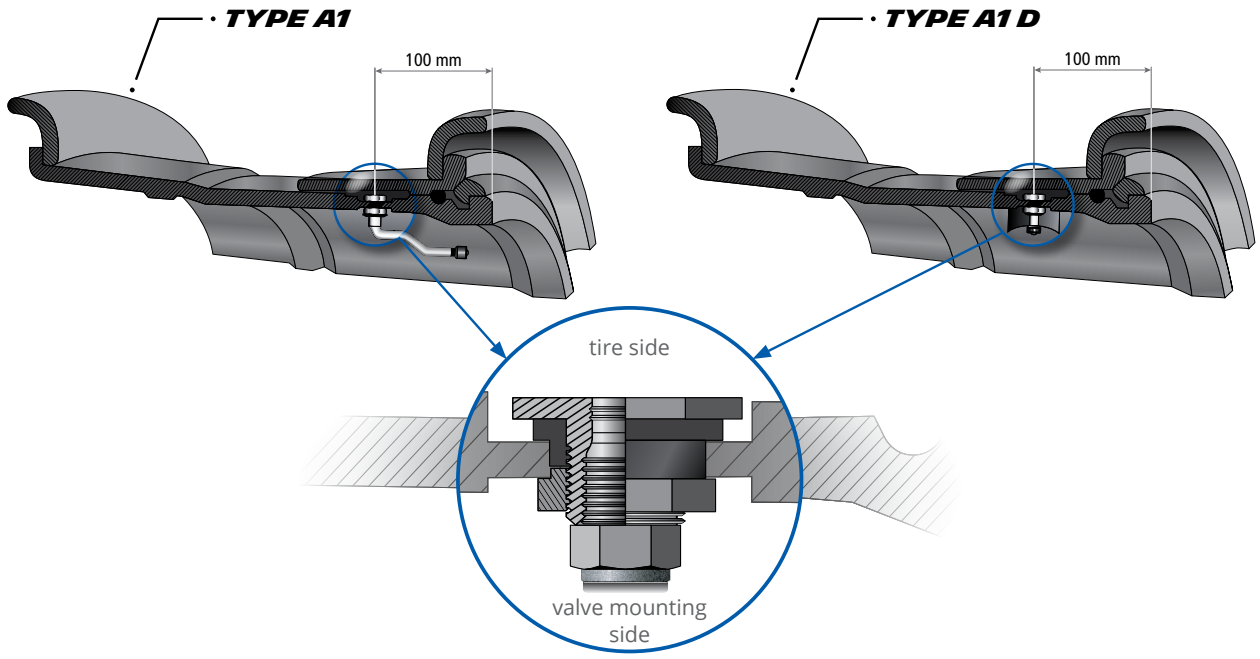

VALVE COMBINATION TYPE A4
Comprised of two TYPE A1 valves, both set at 100 mm from the rim edge, to enable water filling.

VALVE TYPE A2

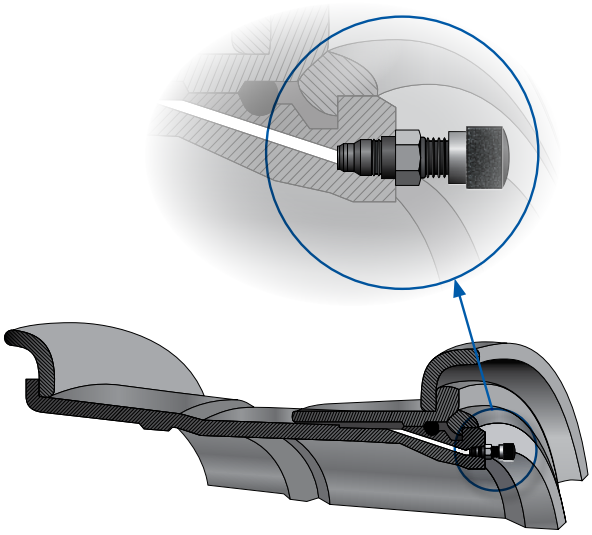

VALVE TYPE A3

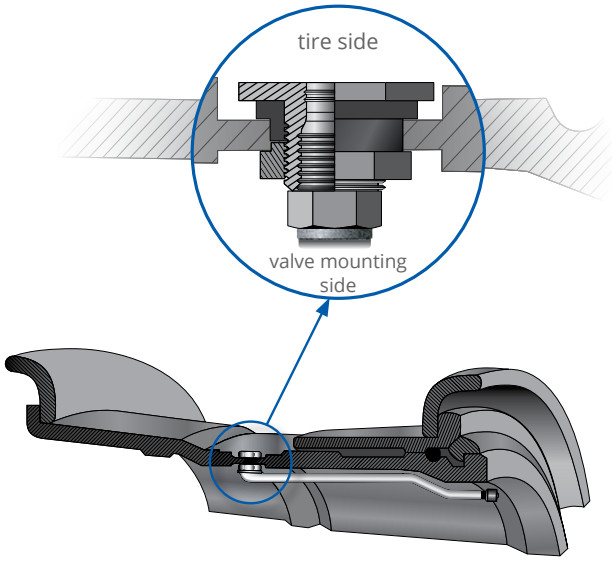

EARTHMOVER TUBELESS VALVE
(AMERICAN, TRA STANDARD)

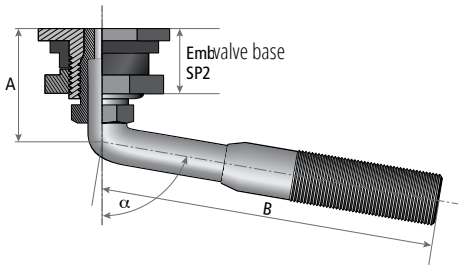

Michelin code	TRA code	ETRTO Designation	A		B		α°
			mm	inches	mm	inches	
R 1837	TRJ 650	V5-04-1	27	1.08	79	3.12	100°

Valves used on a SP2 American valve base
[20.5 mm (0.8 inch) diameter hole] and also on AM tubes.

VALVE BASE

ACTUAL VALVE
(mounting with tube)

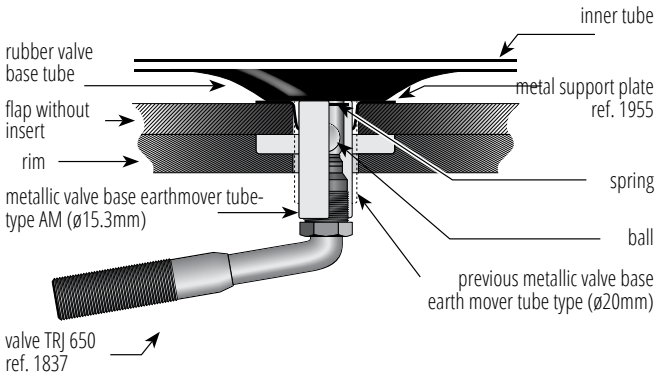

AIR AND WATER AGRICULTURAL-TYPE VALVE BASE

Allows tire to be water-filled.
Valve with core holder 1139 and plastic nut ref. 1225

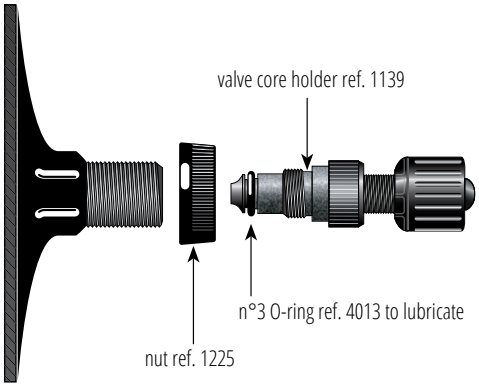

ref. **1224** code TR 218A

APPROXIMATE LOOSE MATERIAL DENSITIES

UNITS OF MEASURE AND CONVERSION TABLES

UNITS OF MEASURE AND CONVERSION TABLES

MEASUREMENT	ABBREVIATION	CONVERSION FACTOR	ABBREVIATION	MEASUREMENT	CONVERSION FACTOR	ABBREVIATION
TORQUE						
pound-foot	lb ft	**x 0.1383**	= m kg	kilogramme metre	**x 7.233**	= lb ft
kilogramme metre	m kg	**x 9.81**	= m N	Newton metre	**x 0.102**	= m kg
LENGTH						
inch	in	**x 0.0254**	= m	metre	**x 39.37**	= in
foot	ft	**x 0.3048**	= m	metre	**x 3.281**	= ft
yard	yd	**x 0.9144**	= m	metre	**x 1.0936**	= yd
mile	ml	**x 1.6093**	= km	kilometre	**x 0.6214**	= ml
LOAD						
pound	lb	**x 0.4536**	= kg	kilogramme	**x 2.205**	= lb
long ton (G.B.) 2240 lb	lg ton	**x 1.016**	= t	metric tonne	**x 0.984**	= lg ton
short ton (U.S.) 2000 lb	sh ton	**x 0.907**	= t	metric tonne	**x 1.103**	= sh ton
DENSITY						
pound per cubic foot	lb/cu ft	**x 16.0184**	= kg/m^3	kilogramme/m^3	**x 0.625**	= lb/cu ft
pound per cubic yard	lb/cu yd	**x 0.5933**	= kg/m^3	kilogramme/m^3	**x 1.686**	= lb/cu yd
PRESSURE						
kilo-pascal	kPa	**x 0.01**	= bar	bar	**x 100**	= kPa
atmosphere (at sea level)	atm	**x 0.986**	= bar	bar	**x 1.014**	= atm
pound per square inch	P.S.I.	**x 0.0703**	= kg/cm^2	kilogramme/cm^2	**x 14.22**	= P.S.I.
pound per square inch	P.S.I.	**x 0.069**	= bar	bar	**x 14.513**	= P.S.I.
pound per square inch	P.S.I.	**x 0.068**	= atm	atmosphere	**x 14.7**	= P.S.I.
pound per square inch	P.S.I.	**x 6.895**	= kPa	kilo Pascal	**x 0.145**	= P.S.I.
POWER						
french horse power	C.V.	**x 0.7355**	= KW	kilowatt	**x 1.36**	= C.V.
horse power	H.P.	**x 0.7457**	= KW	kilowatt	**x 1.34**	= H.P.
french horse power	C.V.	**x 0.98**	= H.P.	horse power	**x 1.014**	= C.V.
VOLUME/CAPACITY						
cubic foot	cu ft	**x 0.02832**	= m^3	cubic metre	**x 35.31**	= cu ft
cubic yard	cu yd	**x 0.7646**	= m^3	cubic metre	**x 1.308**	= cu yd
gallon (U.S.)	gal	**x 3.7854**	= l	liter	**x 0.2642**	= gal
TEMPERATURE						
degree fahrenheit	°F	**- 32 et x (5/9)**	= °C	degree Celsius	**x (9/5) et + 32**	= °F



2023 MATERIAL HANDLING

INDUSTRIAL PNEUMATIC TIRES
RADIAL TECHNOLOGY

UPDATED
IN 2023

HEADQUARTERS
Manufacture Française des Pneumatiques Michelin
partnership limited by shares with capital of 504 000 004 €
Registered office: Place des Carmes Déchaux - 63040 CLERMONT-FERRAND Cedex 9 - FRANCE
Tel.: +33(0)4 73 32 20 00

855 200 507 RCS Clermont-Ferrand